Accepted Manuscript

A partial feedback linearization based control design and simulation for three phase shunt active power filter

Soumya Ranjan Mohapatra, Pravat Kumar Ray, Gooi Hoay Beng

PII: S0263-2241(16)30242-1
DOI: http://dx.doi.org/10.1016/j.measurement.2016.05.075
Reference: MEASUR 4091

To appear in: *Measurement*

Received Date: 27 June 2015
Revised Date: 19 May 2016
Accepted Date: 19 May 2016

Please cite this article as: S.R. Mohapatra, P.K. Ray, G.H. Beng, A partial feedback linearization based control design and simulation for three phase shunt active power filter, *Measurement* (2016), doi: http://dx.doi.org/10.1016/j.measurement.2016.05.075

A PARTIAL FEEDBACK LINEARIZATION BASED CONTROL DESIGN AND SIMULATION FOR THREE PHASE SHUNT ACTIVE POWER FILTER

Soumya Ranjan Mohapatra[1], Pravat Kumar Ray[2] and Gooi Hoay Beng[3]

[1]Department of Electrical Engineering, National Institute of Technology Rourkela, India
[2]Department of Electrical and Electronic Engineering, Nanyang Technological University, Singapore
(on leave from National Institute of Technology Rourkela, India)
[3]Department of Electrical and Electronic Engineering, Nanyang Technological University, Singapore
Email:- soumyaranjan597@gmail.com, rayp@ntu.edu.sg , ehbgooi@ntu.edu.sg

Abstract

This paper exploited partial feedback linearization technique to control design of a three phase shunt active power filter (APF) by considering it as a Multiple Input Multiple Output (MIMO) system. The averaged dynamic model of the three phase APF has been derived considering the single phase equivalent circuit of the system. This averaged dynamic model is used to partially feedback linearize the MIMO nonlinear system dynamics. New control input to the linearized system is obtained considering the stability of the complete APF system. After that, control input to APF is derived by nonlinear transformation. Stability of the internal dynamics of the system is analyzed considering zero dynamics of the system. MATLAB/Simulink based simulation results are provided to validate the performance of the controller.

Keywords:- Partial Feedback Linearization, Averaged dynamic model, Active Power Filter, Harmonics.

1. Introduction

Due to extensive use of nonlinear loads such as computers, printers and fax machines, harmonics are induced in the power system. Thus, elimination of harmonics is an important

research challenge. Use of passive filters is undesirable due to their large size, high cost and fixed harmonic compensation characteristics. Active power filter (APF) is an alternative effective solution to filter harmonics. Depending on harmonics compensation characteristics, APF are classified into two types, such as series APF and shunt APF. Series APF is used to compensate voltage harmonics, whereas shunt APF which is used to compensate current harmonics from grid by injecting equal amount of harmonics to the grid but with opposite polarity. Control of single phase shunt APF has been presented in this paper. Shunt APF is connected in parallel at the point of common coupling in between source and load.

Several control strategies have been proposed in the literature to control the power electronic systems such as sliding mode control [1],[2],[13], Lyapunov based control [3], adaptive control [4],[5], feedback linearization based control [6],[8],[9],[10]. Among the above control strategies, feedback linearization based control of power converters is an effective means to analyze stability of the complete nonlinear system.

The nonlinear system having relative degree lower than the order of the system can be partially linearizeable. However by application of Tellegen's theorem, the system can be exactly linearizable [6]. Single phase shunt APF, DC-DC boost converters are examples of second order system and they have relative degree one [6],[9]. Partial feedback linearization (PFL) method has been applied to DC-DC boost converter in [9], whereas exact feedback linearization (EFL) technique has been applied to boost converter in [10]. Due to difficulties in practical implementation of EFL based control of APF system, EFL technique via sliding mode control has been proposed in [6] to control the single phase shunt APF system for improving the performance. In this method authors used an alternating switching scheme to implement the control algorithm. Due to this switching scheme, original property of feedback linearization

control technique is lost. Also different output functions can be derived using Tellegen's theorem to control the compensating current in EFL based controller of APF. As shunt APF falls under the category of systems having relative degree lower than the order of the system, the straightforward PFL based controller can be applied to shunt APF system. Using PFL based controller in APF, compensating current can be controlled directly by considering it as the output function.

In three phase systems such as three phase UPS inverter [12] and three phase grid connected photo voltaic system [7], PFL based control technique has been applied to improve their performance. Authors of [12] applied PFL based control technique by considering the system as both single input single output (SISO) and multiple input multiple output (MIMO) system. Similarly authors of [7] considered grid connected photovoltaic system as MIMO system for applying PFL based control technique. Unlike single phase shunt APF, a three phase shunt APF [16], [17] can be considered as a MIMO system. Compensating currents of three phases can be assumed as three outputs of the system for applying the PFL based control method.

In PFL based controller, it is required to ensure the stability of the internal dynamics of the system. The dynamics of the system which are not linearized or remain unobservable during feedback linearization are treated as internal dynamics of the system. The averaged dynamic model of shunt APF has used for PFL and internal dynamic stability analysis of APF system. In this paper the system stability is ensured using feedback linearization method, which is simpler than small signal analysis method of determination of system stability. It improves the performance of APF by analyzing the stability of the complete system. The average model of the active power filter system is obtained by averaging the filter capacitor voltage and coupling inductor currents over a complete switching cycle.

This paper is organized as follows. Averaged dynamical model of the active power filter is described in section II. PFL based controller design of shunt APF and analysis of stability of its internal dynamics has been carried out in section III. Simulation results and analysis are provided in section IV. Finally in section V conclusions are given.

2. Averaged dynamic model of three phase shunt APF

A structure of three phase APF is shown in Fig.1. For making the system analysis using PFL based control technique easier, a little modification has been carried out in the basic structure of three phase shunt APF. A high resistance connected across the filter capacitor, signifies the leakage current flow from positive plate to negative plate of the capacitor throughout the switching cycle.

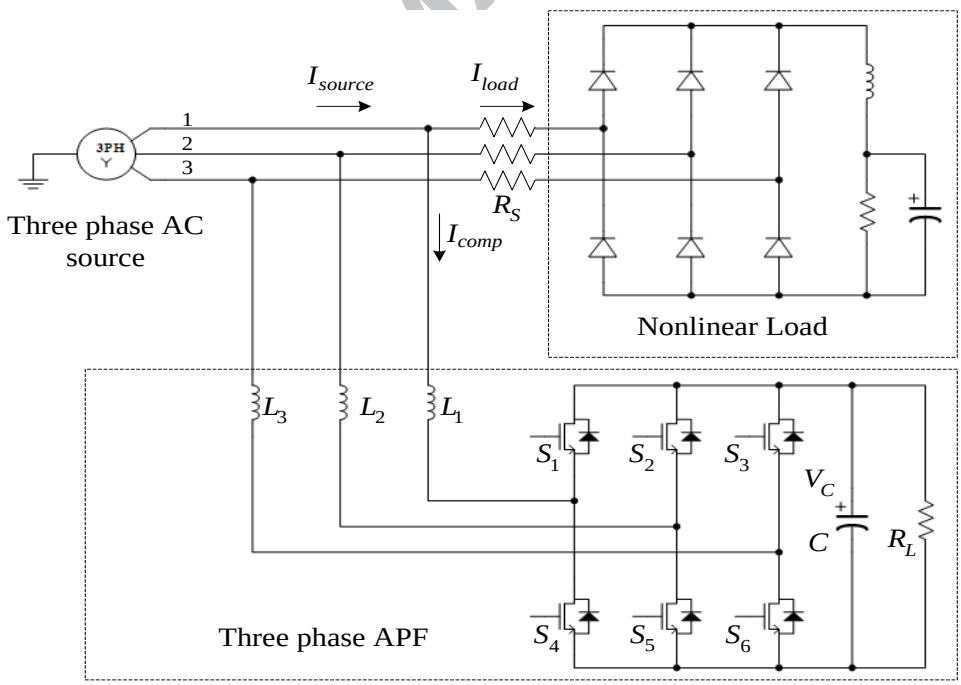

Fig. 1. Three phase shunt active power filter

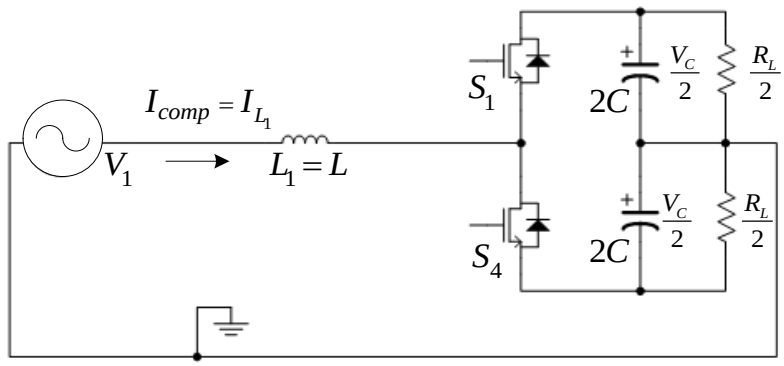

Fig. 2. Equivalent circuit for phase 1 of three phase active power filter.

Fig.2 shows the equivalent circuit for phase 1 of three phase APF. Similar equivalent circuits can also be obtained for other two phases. I_{L_1} is the compensating current in phase 1. Similarly I_{L_2} and I_{L_3} are taken as the compensating currents of phase 2 and 3 respectively. For analysis V_1, V_2 and V_3 are assumed as the phase to neutral voltages of phase 1, 2 and 3 respectively. The averaged dynamic model of three phase APF can be obtained by averaging the inductor currents and capacitor voltage over a complete switching cycle. Consider u_1, u_2 and u_3 are the duty ratios or the control inputs to legs of APF which are coupled to phase 1,2 and 3 respectively through coupling inductor and T is the total switching period, which remain constant for all legs of APF.

The coupling inductance value for all three phases is kept same for making the analysis easier. So that, one can writes $L_1 = L_2 = L_3 = L$. Considering the equivalent circuit of all three phases, one can get the averaged dynamic model of three phase shunt APF as follows:

$$L\frac{dx_{11}}{dt} = (V_1 - \frac{V_C}{2})u_1 + (V_1 + \frac{V_C}{2})(1-u_1) \tag{1}$$

$$L\frac{dx_{12}}{dt} = (V_2 - \frac{V_C}{2})u_2 + (V_2 + \frac{V_C}{2})(1-u_2) \tag{2}$$

$$L\frac{dx_{13}}{dt}=(V_3-\frac{V_C}{2})u_3+(V_3+\frac{V_C}{2})(1-u_3) \tag{3}$$

$$\begin{aligned}C\frac{dx_{14}}{dt}=\frac{1}{2}\Big\{&(I_{L_1}-\frac{V_C}{2R_L})u_1+(I_{L_2}-\frac{V_C}{2R_L})u_1+(I_{L_3}-\frac{V_C}{2R_L})u_1+\\&(-\frac{V_C}{2R_L}-I_{L_1})(1-u_1)+(-\frac{V_C}{2R_L}-I_{L_2})(1-u_2)+(-\frac{V_C}{2R_L}-I_{L_3})(1-u_3)\Big\}\end{aligned} \tag{4}$$

The average values of compensating currents for phase 1,2,3 and capacitor voltage over a switching cycle are respectively chosen as state variables x_{11}, x_{12}, x_{13} and x_{14}. Thus, x_{11}, x_{12}, x_{13} and x_{14} can be expressed as

$$x_{11}=\frac{1}{T}\int_t^{t+T} I_{L_1}(k)dk \tag{5}$$

$$x_{12}=\frac{1}{T}\int_t^{t+T} I_{L_2}(k)dk \tag{6}$$

$$x_{13}=\frac{1}{T}\int_t^{t+T} I_{L_3}(k)dk \tag{7}$$

$$x_{14}=\frac{1}{T}\int_t^{t+T} V_C(k)dk \tag{8}$$

Rearranging (1), (2), (3) and (4), one can get the expressions as follows:

$$\frac{dx_{11}}{dt}=\frac{V_1}{L}+\frac{x_{14}}{2L}(1-2u_1) \tag{9}$$

$$\frac{dx_{12}}{dt}=\frac{V_2}{L}+\frac{x_{14}}{2L}(1-2u_2) \tag{10}$$

$$\frac{dx_{13}}{dt}=\frac{V_3}{L}+\frac{x_{14}}{2L}(1-2u_3) \tag{11}$$

$$\frac{dx_{14}}{dt}=\frac{x_{11}}{2C}(2u_1-1)+\frac{x_{12}}{2C}(2u_2-1)+\frac{x_{13}}{2C}(2u_3-1)-\frac{3x_{14}}{4R_LC} \tag{12}$$

Equations (9), (10), (11) and (12) can be put to a MIMO nonlinear system equation as

$$\dot{X}=f(X)+g_1(X)u_1+g_2(X)u_2+g_3(X)u_3 \tag{13}$$

where $f(X)=\begin{pmatrix} \frac{x_{14}}{2L}+\frac{V_1}{L} \\ \frac{x_{14}}{2L}+\frac{V_2}{L} \\ \frac{x_{14}}{2L}+\frac{V_3}{L} \\ -\frac{x_{11}}{2C}-\frac{x_{12}}{2C}-\frac{x_{13}}{2C}-\frac{3x_{14}}{4R_LC} \end{pmatrix}$, $g(X)=\begin{pmatrix} -\frac{x_{14}}{L} & 0 & 0 \\ 0 & -\frac{x_{14}}{L} & 0 \\ 0 & 0 & -\frac{x_{14}}{L} \\ -\frac{x_{11}}{C} & -\frac{x_{12}}{C} & -\frac{x_{13}}{C} \end{pmatrix}$ and $X=[x_{11}\ x_{12}\ x_{13}\ x_{14}]^T$. Consider the compensating currents of three phases as the output functions. Thus, the output functions are as follows:

$$y_1=h_1(x)=x_{11}. \tag{14}$$

$$y_2=h_2(x)=x_{12} \tag{15}$$

$$y_3=h_3(x)=x_{13} \tag{16}$$

3. PFL based controller design for three phase APF

The first step in designing the controller of a system using feedback linearization technique is to find the relative degree of the system. For a MIMO system, relative degree should be found out separately for each output function of the system. Total relative degree of the system is the sum of the relative degrees associated with every output functions of the system. Consider r_1, r_2 and r_3 as the relative degrees associated with outputs y_1, y_2 and y_3 respectively. Differentiating output function y_1 with respect to time one can get

$$\dot{y}_1=L_f h_1(x)+L_{g_1}h_1(x)u_1 \tag{17}$$

where $L_f h_1(x)$ and $L_{g_1}h_1(x)$ are Lie derivatives of $h_1(x)$ with respect to f and g_1 respectively. The relative degree of the system can be obtained by finding the values of $L_f h_1(x)$ and $L_{g_1}h_1(x)$.

$$L_f h_1(x)=\frac{\partial h_1(x)}{\partial x}f(x)=\frac{1}{2L}x_{14}+\frac{V_1}{L} \tag{18}$$

$$L_{g_1}h_1(x)=\frac{\partial h_1(x)}{\partial x}g_1(x)=-\frac{x_{14}}{L} \tag{19}$$

As $L_{g_1}h_1(x)\neq 0$, the relative degree r_1 =1 [14]. Similar procedure can be followed to find the relative degrees r_2 and r_3. It is found that $r_2=r_3$ =1. Thus, the total relative degree of the MIMO

system is $r = r_1 + r_2 + r_3 = 3$. The total order of the system $n = 4$. As $r < n$, the system can be partially linearizable. The stability of the internal dynamics must be verified to ensure the stability of the three phase APF system. The internal dynamics of the three phase APF system can be expressed as

$$\dot{\varphi} = f(y_1, y_2, y_3, \varphi) \tag{20}$$

Where φ is a vector such that $L_{g_1}\varphi(x) = L_{g_2}\varphi(x) = L_{g_3}\varphi(x) = 0$

The above condition will be satisfied if

$$\varphi(x) = \frac{1}{2}\left\{Lx_{11}^2 + Lx_{12}^2 + Lx_{13}^2 + Cx_{14}^2\right\} \tag{21}$$

Differentiating (21) with respect to time and using (13) one obtains

$$\dot{\varphi}(x) = V_1 x_{11} + V_2 x_{12} + V_3 x_{13} - \frac{3x_{14}^2}{4R_L C} \tag{22}$$

As $y_1 = x_{11}$, $y_2 = x_{12}$ and $y_3 = x_{13}$ using (21) and (22) one can get

$$\dot{\varphi} = V_1 y_1 + V_2 y_2 + V_3 y_3 - \frac{3}{2R_L C^2}\left(\varphi - \frac{1}{2}Ly_1^2 - \frac{1}{2}Ly_2^2 - \frac{1}{2}Ly_3^2\right) \tag{23}$$

The stability of the internal dynamics of APF system can be ensured by considering the zero dynamics of the system. Zero dynamics of the system can be obtained by substituting $y_1 = y_2 = y_3 = 0$ in (23). Thus, the zero dynamics of the system is given by

$$\dot{\varphi} = -\frac{3}{2R_L C^2}\varphi \tag{24}$$

The phase plot of the zero dynamics will move through origin having negative slope. This confirms the stability of the internal dynamics of the system. After analyzing the internal dynamics stability of the system, the next step is to derive a control input using the proposed PFL based control of three phase shunt APF. By the nonlinear transformation $u_1 = \dfrac{-L_f h_1(x) + v_1}{L_{g_1} h_1(x)}$ in (17) establishes a linear relationship between output and new control input as follows:

$$\dot{y}_1 = v_1 \tag{25}$$

where v_1 is the new control input of the feedback linearized system corresponding to output y_1. In order to ensure the stability of the complete APF system, the new control input is taken as

$$v_1 = \dot{x}_{11ref} - ke = \dot{x}_{11ref} - k_{11}(x_{11} - x_{11ref}), k_{11} > 0 \tag{26}$$

x_{11ref} is reference compensating current for phase 1. $x_{11ref} = y_{1ref}$ is reference inductor current. From (25) and (26) one can get

$$\dot{e} - k_{11}e = 0 \tag{27}$$

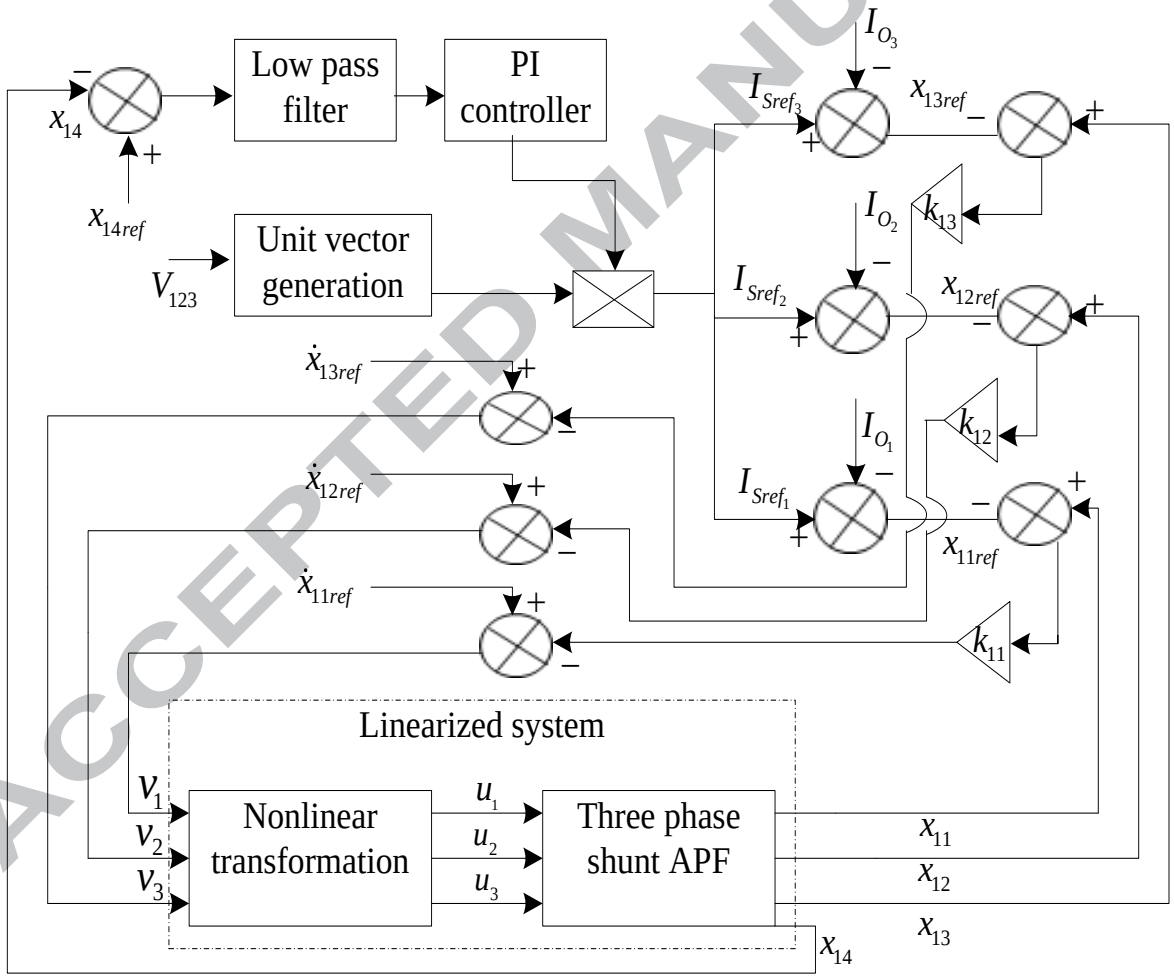

Fig. 3. PFL based controller for three phase APF

As per [11], with positive 'k_{11}', the actual compensating current will track the reference compensating current exponentially. k_{11} determines the convergent speed of the compensating current. Similarly considering the stability of the whole system the new control inputs v_2 and v_3 of the linearized system corresponding to outputs y_2 and y_3 respectively are assumed as follows:

$$v_2 = \dot{x}_{12ref} - ke = \dot{x}_{12ref} - k_{12}(x_{12} - x_{12ref}), k_{12} > 0 \tag{27}$$

$$v_3 = \dot{x}_{13ref} - ke = \dot{x}_{13ref} - k_{13}(x_{13} - x_{13ref}), k_{13} > 0 \tag{28}$$

x_{12ref} and x_{13ref} are the reference compensating currents of phase 2 and 3 respectively. After that, the original control inputs u_2 and u_3 of the three phase APF system can be found out by nonlinear transformation as follows:

$$u_2 = \frac{-L_f h_2(x) + v_2}{L_{g_2} h_2(x)} \tag{29}$$

$$u_3 = \frac{-L_f h_3(x) + v_3}{L_{g_3} h_3(x)} \tag{30}$$

The proposed PFL based controller for three phase APF is shown in Fig. 3. Reference source currents for all three phases are generated by using PI controller (see Fig. 3) as in [15]. I_{Sref_1}, I_{Sref_2} and I_{Sref_3} are reference source currents of phase 1, 2 and 3 respectively. After that reference compensating currents for all three phases are calculated by subtracting load currents from corresponding reference source currents. I_{O_1}, I_{O_2} and I_{O_3} are the load currents of phase 1, 2 and 3 respectively. x_{14ref} is reference capacitor voltage.

4. Results and discussions

In this section, simulation results are reported to validate the performance PFL based controller for three phase APF. Simulation results are also compared with a reference controller [15]. Simulations are carried out in discrete time domain using MATLAB/Simulink. Dormand-Prince (ode45) solver in variable step with discrete time interval of $1*e^{-06}$ has been chosen. Cut off frequency of low pass filter, used in these techniques before PI controller to reduce harmonic

content in source current is 80Hz. The parameters used for simulation are given in Table 5.1. THD is measured up to 50th harmonics at 0.1 second for 2 cycles to verify the performance of the proposed technique. Reference source current is being generated by using a PI controller in both controllers implemented in [15] and the proposed controller. Maximum switching frequency (f_{Switch}), in which comparison has been carried is kept constant for both the controllers. k_P and k_i are the proportion and integral gain of PI controller.

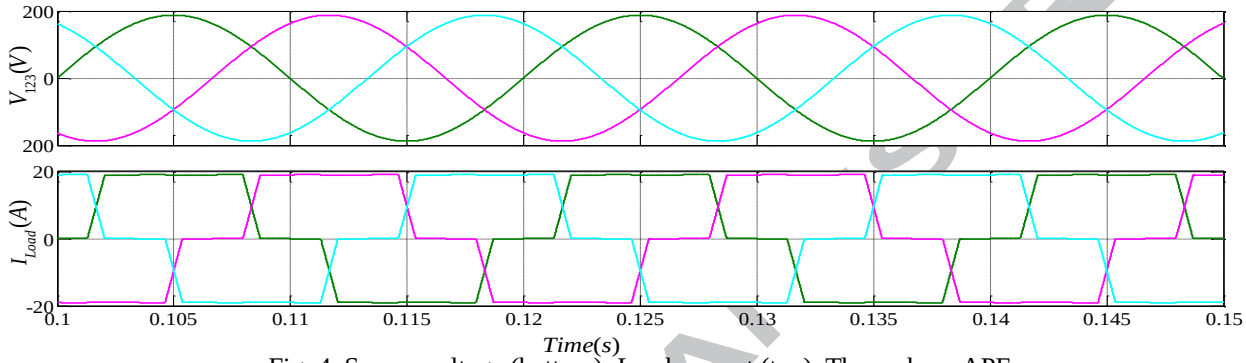

Fig. 4. Source voltage (bottom), Load current (top). Three phase APF

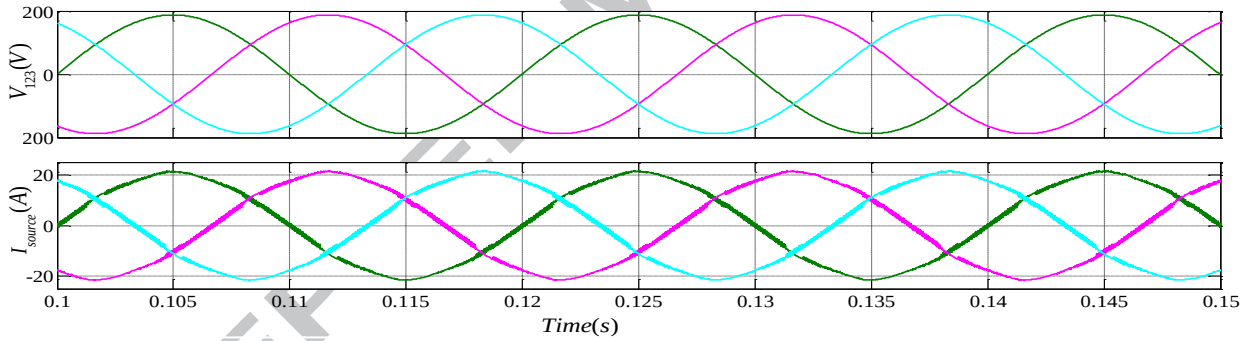

Fig. 5. Source voltage (top), Source current (bottom). PFL based controller for three phase APF

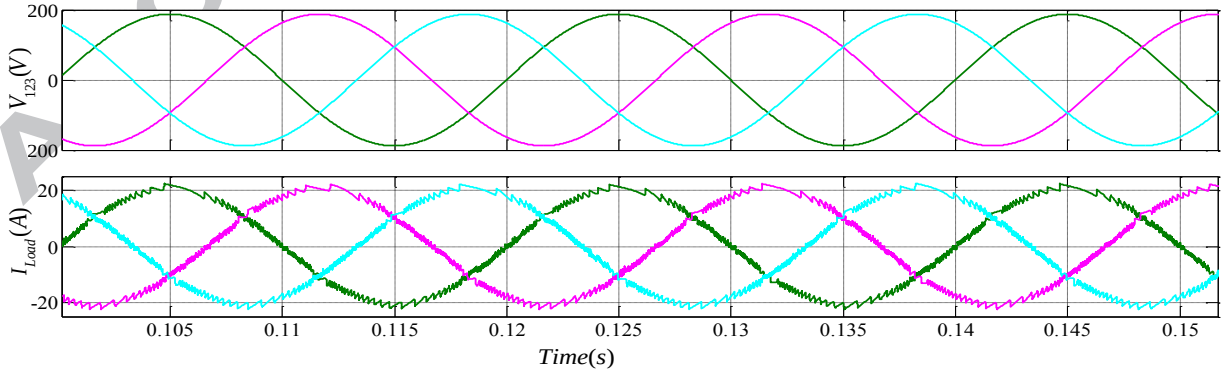

Fig. 6. Source voltage (top), Source current (bottom). Controller reported in [15]

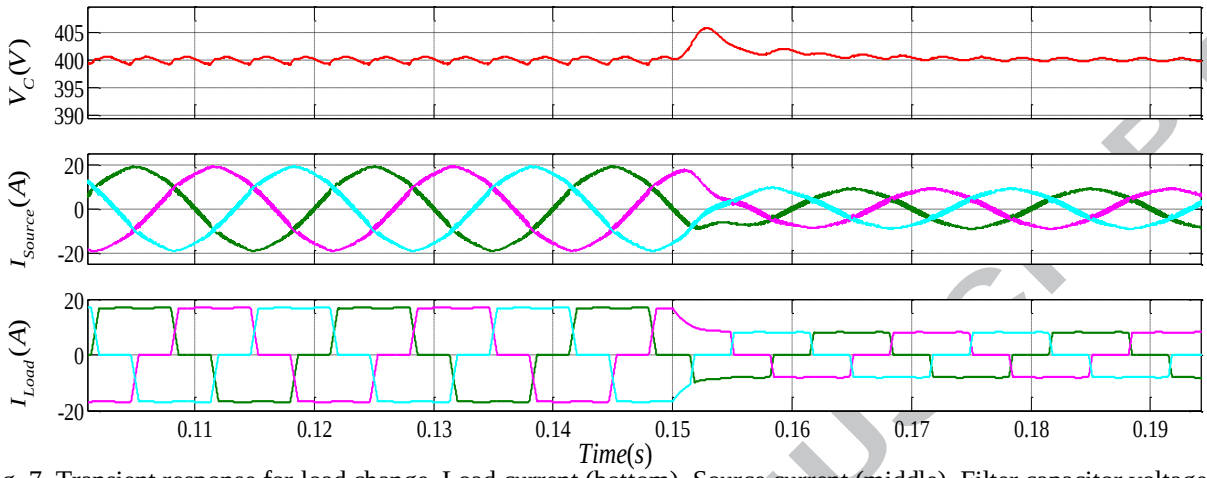

Fig. 7. Transient response for load change. Load current (bottom), Source current (middle), Filter capacitor voltage (top). PFL based controller for three phase APF

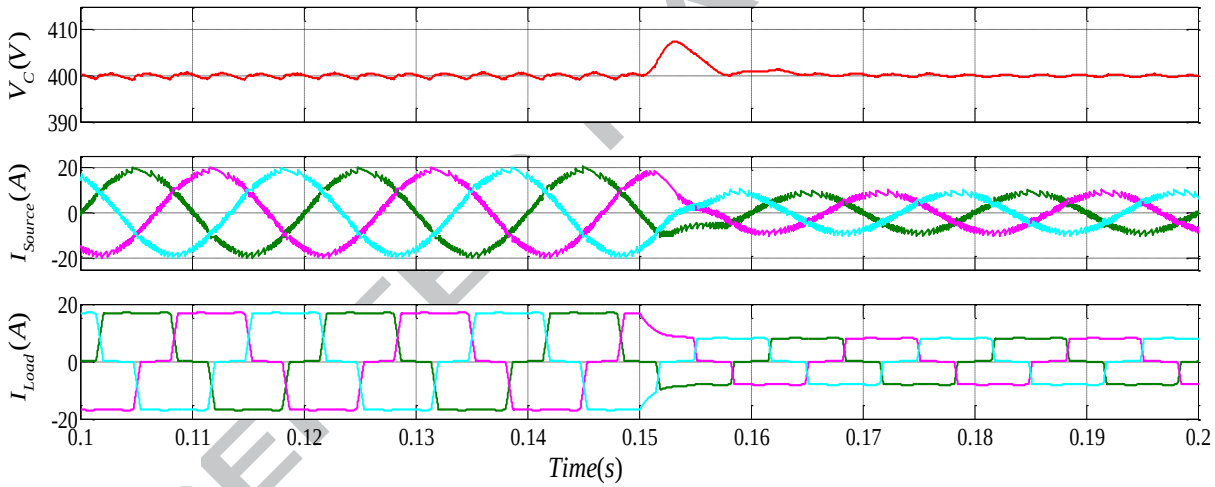

Fig. 8. Transient response for load change. Load current (bottom), Source current (middle), Filter capacitor voltage (top). Controller reported in [15]

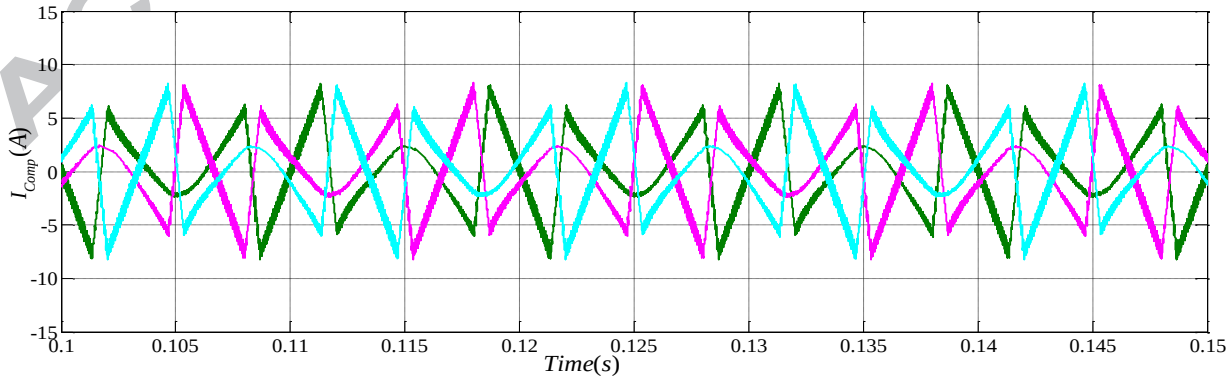

Fig. 9. Compensating current. PFL based controller for three phase APF

Table 1

System parameters used for Simulation for three phase APF

L- 4mH	V_S^{RMS} - 230 V	K_i -10
V_{DC} *- 400 V*	f_{V_S} - 50 Hz	$R_L = 10k\Omega$
C- 1100 µF	$k_1 = 10000$	
f_{Switch} -15 kHz	$k_P = .25$	

THDs of load current and source voltage are found to be 25.76% and 1% respectively. The waveforms of source voltage and load current for three phase APF are shown in Fig. 4. With the PFL based controller source current THD has been reduced to 2.79% (shown in Fig. 5). Further, it can be seen that source currents of all three phases are found to be in same phase to that of source voltages of the respective phases, whereas source current THD is found to be 4.85% in the controller reported in [15]. The wave forms of source voltage and source current for controller reported in [15] is shown in Fig. 6.

To examine the transient response of the proposed controller, simulations have carried out for a sudden load change from peak load current 18A to 10A at 0.15 sec. From Fig. 7 and Fig. 8, it is clear that there is no significant difference has been observed between the transient responses of PFL based controller and controller implemented in [15] as transient response mostly depends on how the reference source current is generated. The filter capacitor voltage has been maintained approximately at a constant value of 400V despite load changes in the proposed controller (shown in Fig. 7). The inductor current or the compensating current required to compensate the harmonics from source current is shown in Fig. 9. This inductor current is equal to the sum of the harmonic components of load current but with opposite polarity.

5. Conclusions

In this paper, a PFL based controller design of three phase shunt APF has been reported in which its averaged dynamic model is used. Three phase APF is considered as a MIMO system. Total relative degree of the MIMO system is found by considering the relative degree of each input output pair separately. Stability of internal dynamics of the complete system in PFL based controller is analyzed. Usual pulse width modulation based switching scheme is employed for implementation of the proposed control algorithm in simulation studies. Finally

MATLAB/Simulink based simulation results are compared with a reference controller to check the performance of the proposed controller. It is found that PFL based controller is a better choice because it provides complete stability of the APF system and reduces the source current Total Harmonic Distortion.

Acknowledgements

This work was supported by the Energy Innovation Programme Office (EIPO) through the National Research Foundation and Singapore Economic Development Board (EDB EIP004).

References

[1] D. A. Torrey and A. M. A. M. Al-Zamel,"Single-phase active power filters for multiple nonlinear loads,". *IEEE* Trans. *Power Electron.*, vol. 10, no. 3, pp. 263–272, May 1995.

[2] J. Miret, M. Castilla, J. Matas, J. M. Guerrero, Luis Garcia de Vicuna, "Design of an analog Quasi-steady-state nonlinear current mode controller for single phase active power filter". *IEEE Trans. Ind. Electron.*, vol. 56, no. 12, pp. 4872-4881, Dec 2009.

[3] H. Komurcugil and O. Kukrer, "A new control strategy for single-phase shunt active power filters using a Lyapunov function,". *IEEE Trans. Ind. Electron.*, vol. 53, no. 1, pp. 305–312, Feb. 2006.

[4] Kuo-Kai Shyu, Ming-Ji Yang, Yen-Mo Chen, Yi-Fei Lin, "Model reference adaptive control design for shunt active power filter system". *IEEE Trans. Ind. Electron.*, vol. 55, no. 1, pp. 97–106, 2008.

[5] L. H. Tey and Y. C. Chu, "Improvement of power quality using adaptive shunt active power filter". *IEEE Trans. on power delivery*, vol.20, pp. 1558-1568, 2006.

[6] J. Matas, Luis Garcia de Vicuna, J. Miret, J. M. Guerrero, M. Castilla, "Feedback linearization of single phase active power filter via sliding mode control". *IEEE Trans. power. Electron.*, vol. 23, no. 1, pp. 116-125, Jan 2008.

[7] M. A. Mahmud, H. R. Pota, M. J. Hossain, "Dynamic stability of three phase grid connected photovoltaic system using zero dynamic design approach", *IEEE Journal of Photovoltaics.*, vol. 2, no. 4, pp. 564–571, 2012.

[8] N. Mendalek, F. Fnaiech, K. Al-Haddad, L. A. Dessaint, " Input state feedback vontrol of shunt active power filter", in Proc. Canad. Conf. Electrical and Computer Eng., , vol.2,pp. 771-773, 2001.

[9] Zinbo Liu, Wenlong ming, Fanghong gao, " A new control strategy for improving performance of boost DC/DC converter based on input-output feedback linearization". *8th world congress on intelligent control and automotion (WCICA)* pp. 2439-2444, 2010.

[10] Huijun Zheng, Dingxin Shuai, "Nonlinear control of boost converter by state feedback exact linearization". *24th chinese Control and decision conference (CCDC)* pp. 3502-3506, 2012.

[11] S.S. Sastry, A Isidori, "Adaptive control of linearizable systems" *IEEE Trans. on automatic control.*, vol. 34, no. 11, pp. 1123--1131, Dec 1989.

[12] Dong-Eok Kim, Dong-Choon Lee, "Feedback linearization control of three phase UPS inverter system". *IEEE Trans. Ind. Electron.*, vol. 57, no. 3, pp. 963-968, 2009.

[13] A.Abrishamifar, A.A.Ahamad, M,Mohamadian, "Fixed switching frequency sliding mode control for single-phase unipolar inverter". *IEEE Trans. power Electron*, vol.27, no.5, pp. 2507-2514, may 2012.

[14] Jean-Jacques E. Slotine, Weiping Li, *Applied Nonlinear Control*. New Jersey: Prentice Hall, 1991.

[15] R. Devaraj, S. Saetieo,D. A. Torrey, " The design and implementation of a three phase active power filter based on sliding mode control" *IEEE Trans. Industry Application*, vol. 31, no. 5, pp. 993–1000, 1995.

[16] H. Akagi, E. H. Watanabe, and M. Aredes, Shunt Active Filters, in Instantaneous Power Theory and Applications to Power Conditioning, *John Wiley & Sons*, Inc., Hoboken, NJ, USA. doi: 10.1002/9780470118931.ch4, 2007.

[17] C. Lascu, L. Asiminoaei, I. Boldea, and F. Blaabjerg, "High performance current controller for selective harmonic compensation in active power filters," *IEEE Transactions on Power Electronics*, vol. 22, no. 5, pp. 1826–1835, Sept 2007.

Highlights

- Partial feedback linearization technique used to control design of an active power filter (APF)
- Averaged dynamic model of APF has been derived from single phase equivalent circuit of the system
- Control input to the linearized system obtained considering stability of the complete APF system
- Stability of the internal dynamics of system is analysed considering zero dynamics of the system