Ocean Engineering 149 (2018) 260–267

Contents lists available at ScienceDirect

Ocean Engineering

journal homepage: www.elsevier.com/locate/oceaneng

Marine turbine system directly connected to electrical grid: Experimental implementations using a nonlinear and robust control

M. Dansoko [a,*], H. Nkwawo [b], F. Floret [c], R. Goma [b], B. Diourté [a], A. Arzandé [d], J.C. Vannier [d]

[a] Centre de Calculs, de Modélisations et de Simulations, Département Physique, USTTB-FST, B.P. E 3206, Bamako, Mali
[b] Université Paris 13, Sorbonne Paris Cité, Laboratoire Physique des Lasers, CNRS, (UMR 7538), F-93430, Villetaneuse, France
[c] Université Paris 13, Sorbonne Paris Cité, Département GEII, IUT Villetaneuse F-93430, Villetaneuse, France
[d] Département Energie, Ecole Supérieure D'Electricité–SUPELEC, 3 Rue Joliot Curie, 91192 Gif-sur-Yvette, France

ARTICLE INFO

Keywords:
Experimental validation
Nonlinear and robust control
Sliding mode
Marine turbine
Synchronous generator

ABSTRACT

This paper deals with real-time implementations of a nonlinear and robust control applied on a marine turbine system. For the experimental validation which uses real data from Raz de Sein site (Brittany, France), the DC motor drives a wound rotor synchronous generator. A computer pilots this DC motor in order to stand in for the marine turbine behavior. Experimental results show the control successful of both outputs (terminal voltage and speed) making possible direct connection to electrical grid. In addition, we verify the robustness properties of the complete system under hard mechanical and electrical perturbations. Finally, a comparative study highlight the proposed control performances compared with conventional AVR-PSS which is one of the most widely adopted controller in industry for electrical grid stabilization.

1. Introduction

Among all renewable energies, marine currents became really attractive recently due to their worldwide energetic potential which is estimated at 100 GW (Ben Elghali, 2008). Marine turbines use part of marine currents in order to extract mechanical energy to produce electrical energy (via synchronous generator) and supplement conventional energy sources. Moreover marine currents are regular, predictable and vary slowly. This behavior is a significant advantage for marine turbines compared to other renewable energy production systems (Dansoko et al., 2014). But their connection to electrical grid adds complexity to regulators design. Indeed, in electricity production, terminal voltage and frequency regulation are required to establish a direct connection. In addition, coupled renewable energy systems must be robust against electrical and mechanical perturbations. In this context we need to develop a robust control taking into account nonlinear specifications of the synchronous generator and simultaneous regulation of terminal voltage and frequency. It is obvious that nonlinear controls operate effectively in wide range while linear controls are efficient only around an equilibrium point. The conservation of nonlinearity properties will improve the transient regimes stability and increase robustness properties. The system will remain stable regardless system perturbations and grid faults without loss of equilibrium point.

Despite the significant number of industrial and academic researches carried out recently on marine turbines systems, most of these investigations are limited to numerical simulations (Ben Elghali, 2008, 2010, 2012; Dansoko et al., 2013, 2014; Ben Elghali et al., 2007; Toumi et al., 2014; Myers and Bahaj, 2005; Bahaj and Myers, 2003). Most of the time, studies can show successful numerical simulations while their experimental validation can produce unsatisfactory results because of simplifications considered during system modeling. Moreover, it may be impossible to achieve the experimental validation of some theoretical models due to unmeasurable variables of model. Very recent works (Toumi et al., 2017; Guangxing et al., 2017) are also limited to numerical simulations. Authors of (Toumi et al., 2017) use a classical controller PI (Proportional Integral) in order to study marine turbine system behavior under faulty rectifier conditions. In paper (Guangxing et al., 2017), the authors study the marine turbine behavior under sudden load variation. In addition, they design turbine generator interface on Visual C++ which communicates with SUPERSIMS platform in order to train mariners and teach schoolchild. Authors of (Yin et al., 2014, 2015a, 2015b, 2015c, 2016) have obtained satisfactory results on pitch angle control and control strategy development for wind turbines. These controls do not regulate terminal voltage and frequency simultaneously. In this condition, it is impossible to envisage a direct connection to electrical grid.

Only two authors were interested in experimental validations of

* Corresponding author.
E-mail address: mdansoko2003@yahoo.fr (M. Dansoko).

https://doi.org/10.1016/j.oceaneng.2017.12.021
Received 13 July 2017; Received in revised form 8 November 2017; Accepted 10 December 2017
Available online 27 December 2017

marine turbine system so far (Andreica et al., 2008; Ben Elghali et al., 2011). In paper (Andreica et al., 2008), the authors implement a marine turbine system using Permanent Magnet Synchronous Generator (PMSG). In this context, it is impossible to regulate terminal voltage and frequency simultaneously. To achieve the connection to electrical grid (not direct), authors use a controlled converter with two linear regulators PI. These regulators are less efficient and less robust than nonlinear controller against perturbations. In paper (Ben Elghali et al., 2011) the authors also experiment a marine turbine system using PMSG which can't be directly connected to the electrical grid. Here, the authors implement a control to regulate the frequency of marine turbine system without taking into account the voltage regulation, which makes impossible the connection to electrical network. The main drawback of this system (marine turbine using PMSG) is the necessity to use an electronic power system to obtain the electrical grid connection, which increases the technical complexity and economic costs compared with direct grid connection. In marine environment, because of technical constraints (installation, waterproofness of power electronic system and its replacement in fault case), it is necessary to envisage the direct grid connection. To achieve this objective, the control development has to take into account system nonlinear specifications, thus helping to avoid the stall phenomena during severe perturbations. In addition, none of the two authors has experimented a marine turbine system in direct connection. Moreover, no robustness test is performed in order to evaluate the efficiency of the proposed models and no multivariable nonlinear controller (voltage and frequency regulation) is implemented.

In this paper, we study a marine turbine system which is directly connected to an electrical grid. Then, we implementt in real-time a Nonlinear Sliding Mode Control (NSMC) in order to avoid the stall phenomena during the robustness tests (electrical and mechanical perturbations). The choice of this control technique is due to its great robustness and its convergence rapidity. The major advantage of this control law consists in simultaneous regulation of both outputs, terminal voltage and speed, through a single input, the synchronous generator excitation. This double regulation makes possible the direct connection to grid. This nonlinear control design, inspired by the one described in (Kenné et al., 2010a) is improved by using sliding mode techniques in order to increase the robustness properties. In addition, the DC motor, which drives the synchronous generator, is controlled in order to reproduce the marine turbine behaviors. The experimental setup includes a monitor (PC) which controls all devices via a conversion board *DSP RTI 1103*.

The model of marine turbine system is described in section "Marine turbine system modeling". The synthesis of the proposed control law is detailed in section "Control strategy description". The results of simulation are presented in section "Simulation results" in order to highlight the robustness properties of the proposed control scheme compared with AVR-PSS. The validation of these results are illustrated in section Experimental validation". Finally, some concluding remarks are made in section "Conclusion".

1.1. Marine turbine system modeling

In this study, the electrical generator is driven by a three-blade marine turbine with horizontal axis. The blades profile, inspired from National Advisory Committee for Aeronautics (NACA 44) is based on BEM theory. Up to date, this profile is the best in blades design and it is given in more details in (Ben Elghali et al., 2007). The mechanical power $P_m$provided by the marine turbine is given as follows (Ben Elghali et al., 2012; Dansoko et al., 2013, 2014; Toumi et al., 2014):

$$P_m = \frac{1}{2}\rho C_p S V_t^3 \tag{1}$$

ρ, $S$are respectively the water density and the cross-sectional area of the marine turbine. The mechanical power is maximized by using the Maximum Power Point Tracking (MPPT) strategy. $C_p$is the coefficient of power extraction and its approximation model that we have used is represented by equation (2). The reasons of this choice are given in further details in paper (Dansoko et al., 2013, 2014).

$$C_p = a\lambda^4 - b\lambda^3 + c\lambda^2 + d\lambda + e \tag{2}$$

with$\lambda = \frac{R\omega}{V_t}$ and *a, b, c, e* real numbers such:

$$a \simeq 1.9210^{-4}; \quad b \simeq 5.210^{-3}; \quad c \simeq 2.4410^{-2}; \quad d \simeq 5.7910^{-2}; \quad e \simeq 1.3810^{-4}.$$

R, ω are respectively radius and rotation speed of marine turbine. $V_t$is a speed tide and the chosen model (Ben Elghali et al., 2010, 2012; Guangxing et al., 2017) is actually the most used in the study of marine turbine systems.

$$V_t = V_{nt} + \frac{C-45}{95-45}(V_{st} - V_{nt}) \tag{3}$$

V_{st}, V_{nt}, are respectively the spring and neap tide current velocities of the site separated by an interval of 6 h. C is the tide coefficient of the site which varies between 20 and 120. Values 95 and 45 respectively represent the medium tide coefficients which correspond to spring and neap water.

In order to convert mechanical energy into electricity, synchronous generators are more advantageous than asynchronous generators in marine turbine applications (Ben Elghali et al., 2010, 2012). This synchronous generator advantage is due to their better conversion efficiency and their better operation capacity in marine environment (Ben Elghali et al., 2010, 2012). Moreover there are two types of synchronous generators: Wound Rotor Synchronous Generator (WRSG) and Permanent Magnet Synchronous Generator (PMSG). The WRSG, well-regulated, can be directly connected to electrical grid while the PMSG must inevitably use power electronic interface to ensure the grid connection (Dansoko et al., 2013, 2014). This fact is a technical and economic advantage for the use of WRSG. Indeed, it is not necessary to use electronic power interface in these conditions. For this reason, we have chosen the WRSG generator in this study. The dynamics of this generator connected to infinite bus system are presented by the following third order model (Kenné et al., 2010a, 2010b; Damm et al., 2004):

$$\begin{cases} \dot{\delta} = \omega \\ \dot{\omega} = -\dfrac{D}{H}\omega - \dfrac{\omega_s}{H}(P_e - P_m) \\ \dot{P}_e = -\dfrac{X_{ds}}{X'_{ds}T'_{d0}}\left(P_e - \left\{\dfrac{V_s}{X_{ds}}\sin\delta\left[E_f + T'_{d0}(X_d - X'_d)\dfrac{V_s}{X'_{ds}}\omega\sin\delta\right] + T'_{d0}\dfrac{X'_{ds}}{X_{ds}}P_e\omega\cot\delta\right\}\right) \end{cases} \tag{4}$$

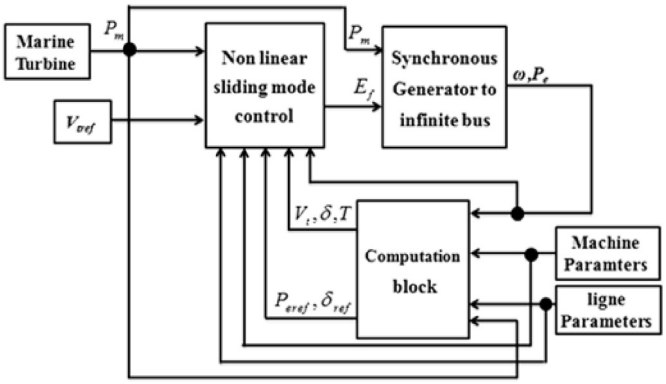

Fig. 1. Structure of the proposed control.

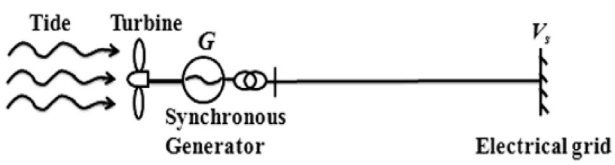

Fig. 2. Marine turbine system connected to grid.

where.$\omega = \omega_g - \omega_s$, $E_f = k_c.u_f$ and $0 < \delta < \pi$.

δ, ω_g, P_e, H, D are respectively power angle, generator angular speed, active electrical power, inertia constant and damping constant of synchronous generator. V_s and ω_s are respectively voltage of infinite bus and synchronous machine speed. X_d, $X_d^{'}$, X_{ds}, $X_{ds}^{'}$ represent respectively generator direct axis reactance, generator direct axis transient reactance, direct axis total reactance and direct axis transient total reactance of the system (generator, transmission line and transformer).

2. Control strategy description

In this study, our main goal consists in the direct connection of the marine turbine system to electrical grid; this requires the nonlinear control law development to regulate simultaneously two outputs (frequency and terminal voltage) via a single input (generator excitation). In addition, this control law must be robust in order to reject perturbations coming to tide and avoid the instability problem of synchronous generators connected to the grid. Indeed, in (Kenné et al., 2010a) authors obtain satisfactory experimental results by validating a robust nonlinear control law to regulate terminal voltage and stabilize transient regimes of synchronous generator connected to infinite bus. The basic idea of this technique assumes that the mechanical power varies slowly so that its derivative can be neglected with respect to others system dynamics. This behavior is compatible with marine turbine dynamics which are very slow. To increase the robustness properties, we have combined the developed method in (Kenné et al., 2010a) with sliding mode technique. The proposed control technique compared to Second Order Sliding Mode Control (SOSMC in (Ben Elghali et al., 2011)) is simpler regarding the design and the parameters number to tune (three parameters for the proposed control which regulates two outputs and three parameters for SOSMC which regulates only one output). The parameters number with SOSMC will increase if this controller must regulate two outputs. Note that the parameters tuning is a difficult step in practice. In addition, the proposed control regulates two outputs via one input while the SOSMC, proposed in (Ben Elghali et al., 2011), regulates one output via one input. To achieve our control objective, it should be necessary to combine this SOSMC with other techniques in order to ensure the double regulation via single input.

The synthesis technique of proposed control law is described as follows:

Let us now consider the following transformation:

$$T = \delta - \delta_{ref} + \lambda_0 \omega \tag{5}$$

with λ_0 a positive constant. This transformation T establishes a link between the speed and the terminal voltage regulation because the control designed must regulates two outputs through a single input (synchronous machine excitation). Note that the terminal voltage regulation is realized through the convergence of power angle towards its reference. The power angle and its reference are given as follows (Kenné et al., 2010a; Damm et al., 2004; Marino et al., 2001):

$$\delta = ar\cot g\left(\frac{V_s}{X_s P_e}\left(-\frac{X_d V_s}{X_{ds}} + \sqrt{V_t^2 + \frac{X_s^2}{V_s^2}P_e^2}\right)\right) \tag{6}$$

$$\delta_{ref} = ar\cot g\left(\frac{V_s}{X_s P_m}\left(-\frac{X_d V_s}{X_{ds}} + \sqrt{V_{tref}^2 + \frac{X_s^2}{V_s^2}P_m^2}\right)\right) \tag{7}$$

If δ converges to its reference δ_{ref} and $P_e$converges towardsP_m, consequently the terminal voltage $V_t$converges to its referenceV_{tref}.

As the terminal voltage dynamic is not directly represented in the state mode of Eq. (1), we will use the estimation model given as follows (Kenné et al., 2010a; Damm et al., 2004; Marino et al., 2001):

$$V_t = \left(\frac{X_s^2 P_e^2}{V_s^2 \sin^2\delta} + \frac{X_d^2 V_s^2}{X_{ds}} + \frac{2X_d X_s}{X_{ds}} P_e \cos\delta\right)^{1/2} \tag{8}$$

The transformation T converges towards 0 if:

$$\dot{T} = -aT \quad \text{with} \quad a > 0.$$

The unique solution of the above equation allows to define the reference electric power as:

$$P_{eref} = \frac{H}{\lambda_0 \omega_s}\left[aT + \omega\left(1 - \lambda_0 \frac{D}{H}\right)\right] + P_m \tag{9}$$

Let us consider the slide surface$S = P_e - P_{eref}$, as well as Lyapunov function:

$$V = \frac{1}{2}S^2 = \frac{1}{2}(P_e - P_{eref})^2 \tag{10}$$

The time-derivative of (10) is: $\dot{V} = S\dot{S} = (P_e - P_{eref})(\dot{P}_e - \dot{P}_{eref})$where $\dot{P}_{eref}$ is the derivate of P_{eref}. The equivalent part of sliding mode control is obtained for a zero time derivate of sliding surface $\dot{S} = 0$. By choosing a discontinuous part as follows:

$$E_f^{dis} = -\frac{X_{ds}^{'} T_{d0}^{'}}{V_s \sin(\delta)}[K sign(S)]$$

We easily prove that if $K > 0$:

$$\dot{V} = -K(S\ sign\ S) = -K|S| < 0 \tag{11}$$

The above equation (11) proves that Lyapunov function V converges to 0, which implies the convergence of P_e to P_{eref}. As T converges exponentially to 0, we can deduce that the relative speed ω converges to 0 and the power angle δ converges to its reference δ_{ref}. From (6) and (7), we can conclude that P_e converges to P_m and V_t converges to V_{tref}.

By summing the discontinuous and equivalent parts, we obtain the complete structure of the proposed control as follows:

$$E_f = \frac{X_{ds}^{'} T_{d0}^{'}}{V_s \sin(\delta)}\left[P_e\left(\frac{X_{ds}}{X_{ds}^{'} T_{d0}^{'}} - \omega\cot(\delta)\right) - \frac{X_{ds} - X_{ds}^{'}}{X_{ds} X_{ds}^{'}}\omega V_s^2 \sin^2(\delta) - \frac{a^2 H}{\lambda_0 \omega_s}T - \left(1 - \lambda_0 \frac{D}{H}\right)\left\{\frac{D}{\lambda_0 \omega_s}\omega + \frac{1}{\lambda_0}(P_e - P_m)\right\} - K sign(S)\right] \tag{12}$$

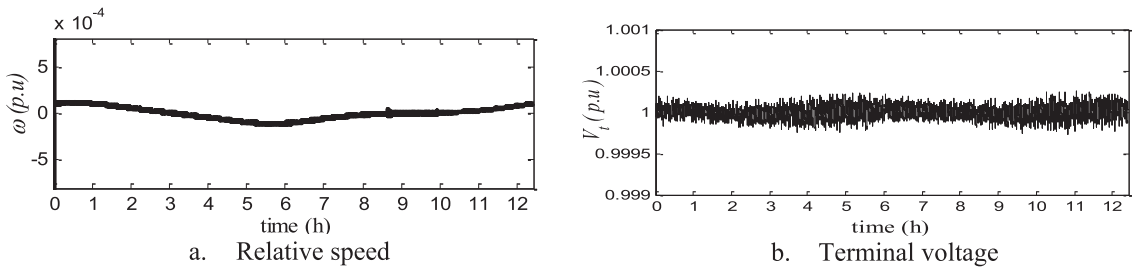

Fig. 3. Simulation over one tide period.

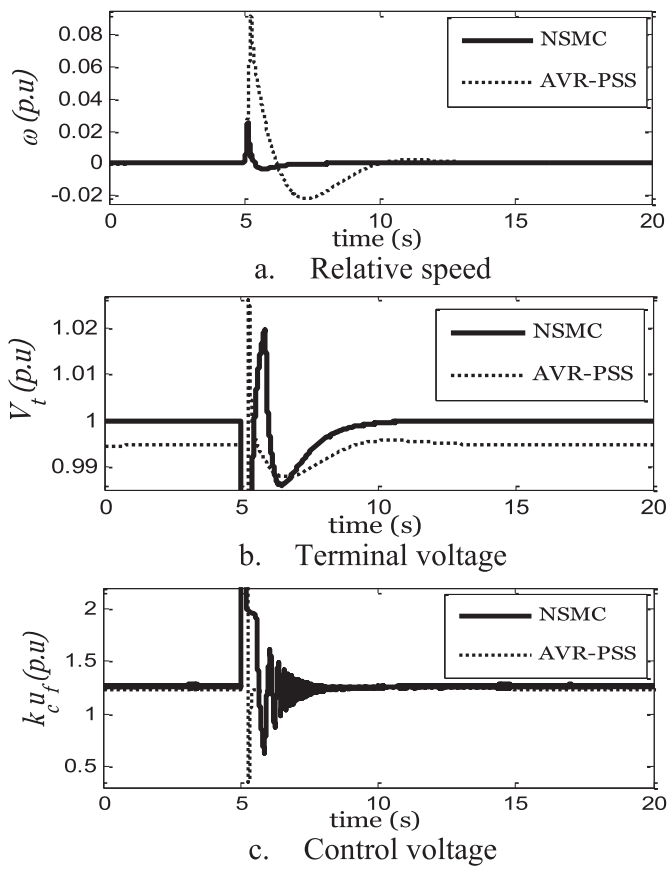

Fig. 4. Robustness test (Short-circuit of 200 ms duration after 5s).

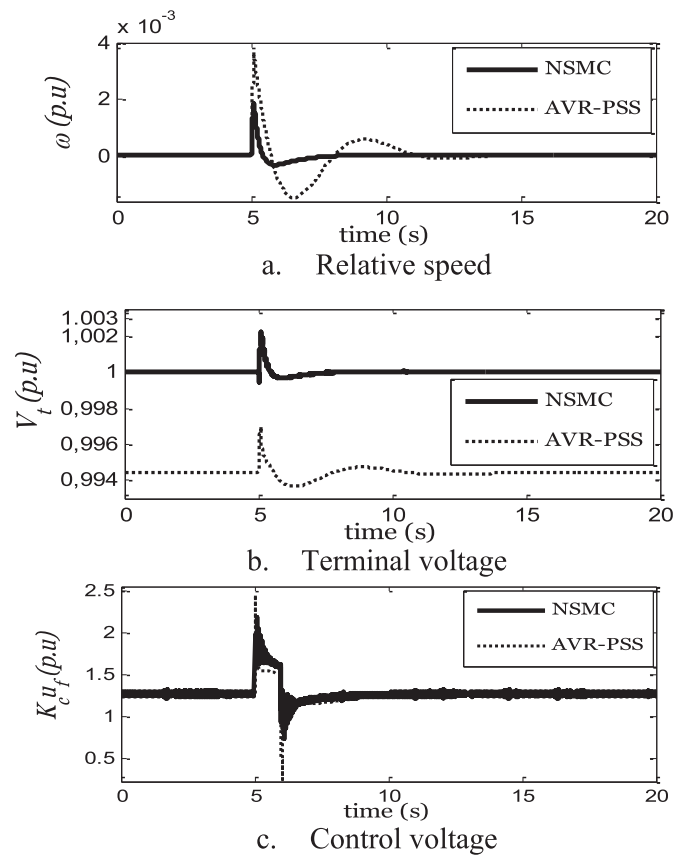

Fig. 5. Robustness test (20% increase of mechanical power during 1s).

The structure of the proposed control is illustrated by the Fig. 1.

3. Simulation results

The marine turbine system (Fig. 2) controlled is simulated in Matlab/Simulink environment over one tide period of semidiurnal type (12h25mn) and under some perturbations (mechanical and electrical). The obtained results under perturbation are presented over 20s duration in order to highlight robustness properties of the proposed nonlinear sliding mode control with respect to classical controller AVR-PSS. The electrical perturbation is a short circuit which is illustrated by the following sequence:

1. At t = 0, the system is in pre-fault state.
2. At t = 5s the system is subjected to a short circuit.
3. At t = 5.2s the short circuit is removed and the system is carried back to its initial state.

The mechanical perturbation is a temporary turbine fault which is summarized as follows:

1. At t = 0, the system is in pre-fault state.
2. At t = 5s the mechanical power is increased of 20% of its value.
3. At t = 6s the mechanical power is carried back to its initial value.

For a reference voltage of 1 *p. u*, the obtained simulation results are illustrated by the following figures (Figs. 3–5):

Although the proposed control regulates effectively terminal voltage and relative speed (Fig. 3), we notice that these two outputs vary under tide speed effect.

The simulation results (Figs. 4 and 5) prove that the proposed control is efficient to regulate relative speed and terminal voltage before and even after significant faults. Without any damage, we have proved that the marine turbine system can be coupled to electrical grid.

The comparative study shows the NSMC efficiency with respect to conventional AVR-PSS in terms of convergence quickness, peak overshoots attenuation, oscillations damping and precision in terminal voltage regulation. These robustness properties prove that the proposed

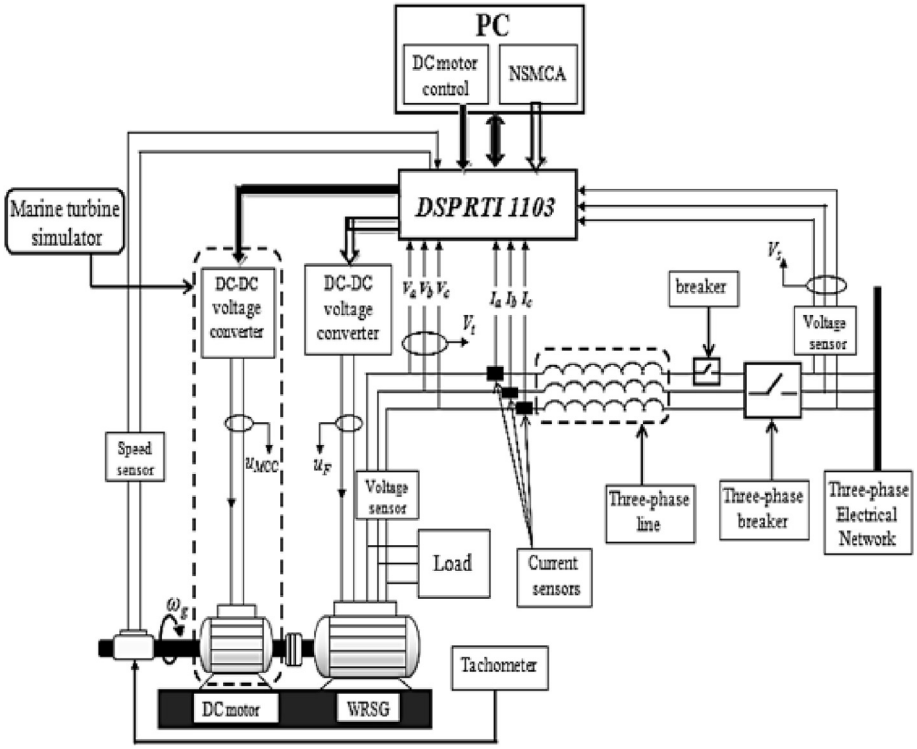

Fig. 6. Schematic of experimental setup.

nonlinear sliding mode control further improves the grid connection quality compared with AVR-PSS which is the most used controller in the electrical networks stabilization. This fact is very important to avoid the well-known stall phenomena of synchronous generators to electrical grid.

4. Experimental validation

In order to validate our obtained simulation results, we have implemented the proposed control law on experimental setup. This experimental setup which is illustrated by Fig. 6 includes a synchronous generator and a DC motor which are coupled on the same shaft. A tachometer with speed to voltage ratio constant of 1000 rpm/60 V fixed on the shaft end allows measuring the machines rotation speed. In addition, voltage and current sensors are used to send control input variables toward the Personal Computer (PC) via a conversion board *DSP RTI 1103*. The *DSP RTI 1103* is the interface between machines and Matlab/Simulink environment software which allows realizing data acquisition in real time. A first control voltage obtained from tide profile is sent by PC toward the *DSP RTI 1103*, then toward a DC-DC voltage converter to drive DC motor so that it behaves as marine turbine. In the

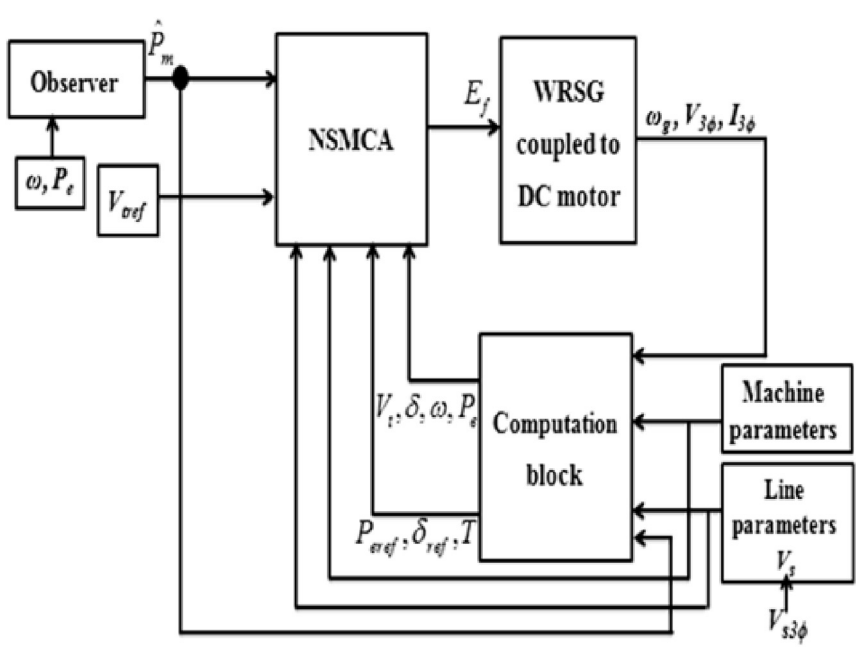

Fig. 7. Structure of implemented control (NSMCA).

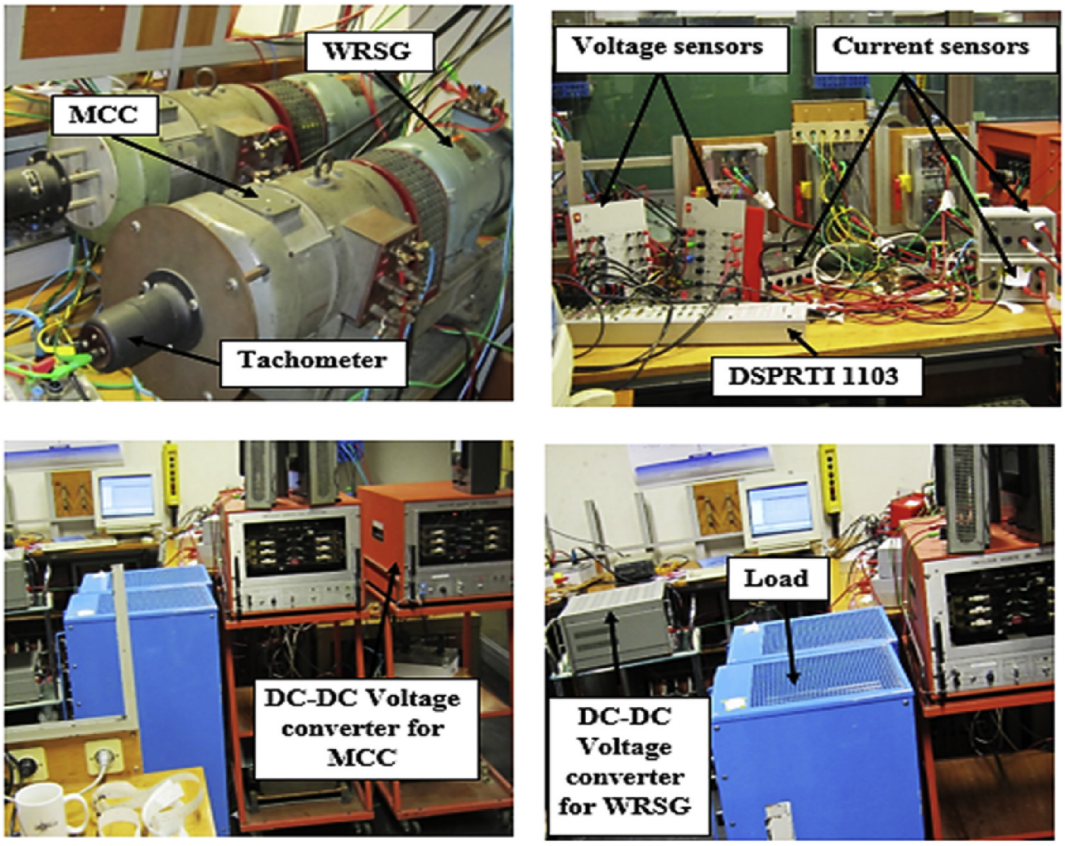

Fig. 8. Photo figure of experimental bench.

same way, a second control voltage generated by our proposed controller is sent to act on synchronous generator excitation in order to regulate its terminal voltage and speed.

As the mechanical power is not physically measurable, we do use an observer to estimate it. See (Kenné et al., 2010a) for further informations. This estimation is given by:

$$\begin{cases} \dot{\hat{\omega}} = \frac{\omega_s}{H}\hat{P}_m - \frac{D}{H}\omega - \frac{\omega_s}{H}P_e + u \quad \text{avec} \quad u = k_\omega \text{sign}(\omega - \hat{\omega}) \\ \dot{\hat{P}}_m = -k_{P_m}\text{sign}(e_{P_m}) = -k_{P_m}\text{sign}\left(-\frac{H}{\omega_s}u^{eq}\right) \end{cases} \tag{13}$$

whereu^{eq} is the equivalent part of u which is also considered as its average.

When the experimental bench has been achieved, we have implemented our nonlinear sliding mode control and the obtained results were not satisfactory due to the well-known chattering effect introduced by the sign function. Because of this undesirable effect making unstable the bench, we replace the sign function by one of its classical approximation, defined in (Beltran et al., 2008) as follows:

$$sign(s) \simeq \frac{S}{|S| + \varepsilon}$$

where ε is a small positive constant and $S = P_e - P_{eref}$ is the slide surface. The choice of this approximation can be explained by two reasons. Firstly, we can easily prove mathematically the new control law stability without imposing the conditions on the slide surface. Secondly, we can adjust the parameter ε so to approximate in practice the sign function stability conditions while avoiding the chattering phenomena. The new control law is defined as follows:

$$E_f = \frac{X'_{ds}T'_{d0}}{V_s \sin(\delta)}\left[P_e\left(\frac{X_{ds}}{X'_{ds}T'_{d0}} - \omega\cot(\delta)\right) - \frac{X_{ds} - X'_{ds}}{X_{ds}X'_{ds}}\omega V_s^2 \sin^2(\delta) - \frac{a^2 H}{\lambda_0 \omega_s}T - \left(1 - \lambda_0\frac{D}{H}\right)\left\{\frac{D}{\lambda_0\omega_s}\omega + \frac{1}{\lambda_0}(P_e - P_m)\right\} - K\frac{S}{|S| + \varepsilon}\right] \tag{14}$$

By using the technique developed in control strategy description part, we prove mathematically the new control law stability by:

$$\dot{V}(S) = \dot{S}S = -K\frac{S^2}{|S| + \varepsilon} < 0 \tag{15}$$

where $V(S)$ is the Lyapunov function and K is a positive real.

In these conditions, we will loose the finite time convergence but we obtain an asymptotic convergence. The structure of this new control law is described in Fig. 7 and a photo figure of experimental bench is illustrated in Fig. 8.

The new control, Nonlinear Sliding Mode Control Approximated (NSMCA), has been validated experimentally in two steps. Firstly, over one tide period (12h25mn) whose variations are brought back to 60s duration in order to study speed tide variations effect on the direct grid connection possibility. Secondly, over 20s duration in order to evaluate the NSMCA effectiveness compared to AVR-PSS under electrical and mechanical perturbations.

In practice, we have not an automatic device to produce a short-circuit, consequently, the electrical perturbation has been realized on one of the three transmission lines. The first electrical perturbation is a temporary opening of one transmission line as shown the following sequence.

1. At t = 0, the system is in pre-fault state.

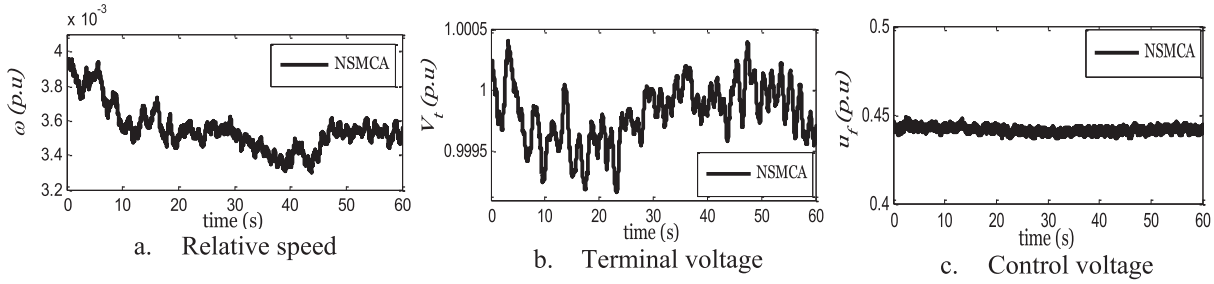

Fig. 9. Experimental results over one tide period brought back to 60s duration.

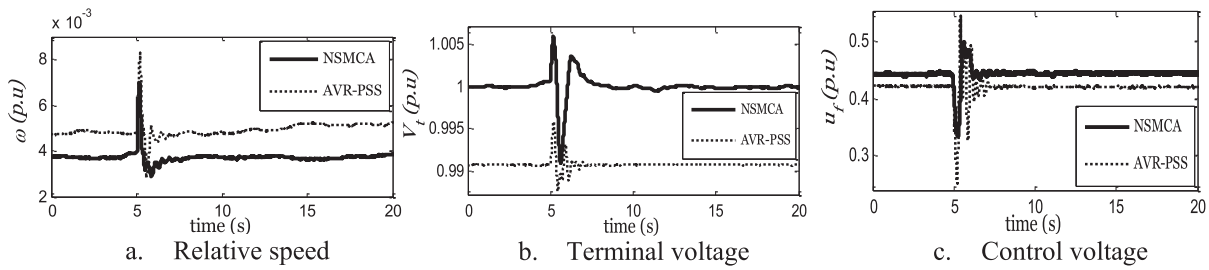

Fig. 10. Robustness test (temporary opening of one transmission line).

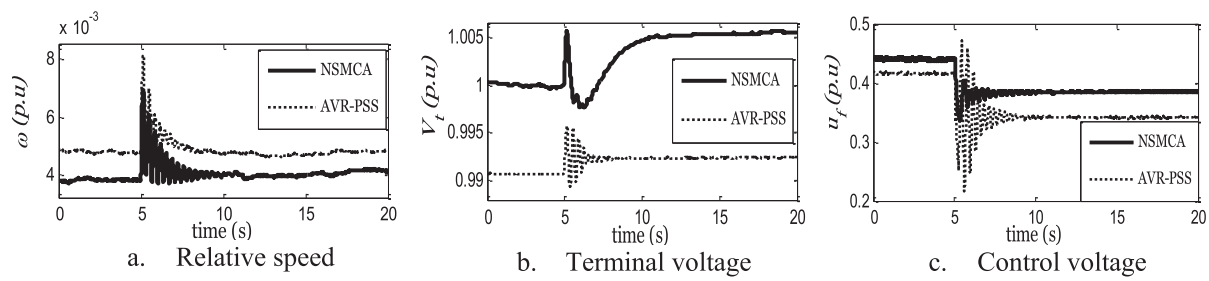

Fig. 11. Robustness test (permanent opening of one transmission line).

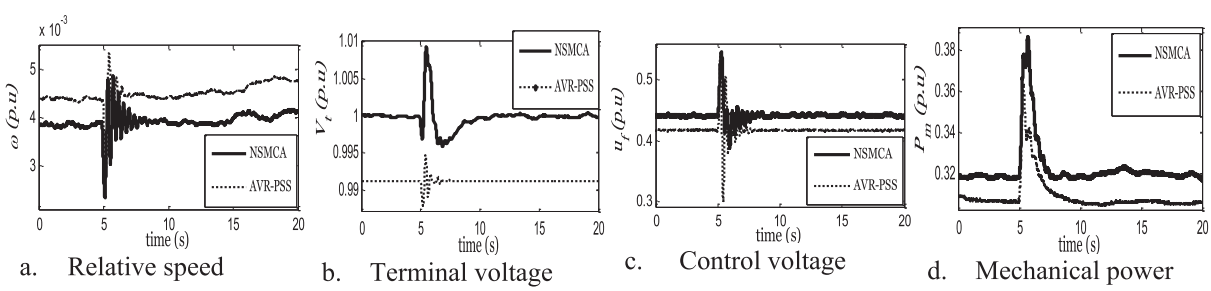

Fig. 12. Robustness test (temporary variation of mechanical power).

2. At t = 5s one of the three transmission lines is opened and at t = 6s this transmission line is reconnected.

The second electrical perturbation is verified with respect to permanent opening of one transmission line. The following sequence summarizes this fault.

1. At t = 0, the system is in pre-fault state.
2. At t = 5s one of the three transmission lines is opened and the system operates under this condition.

The mechanical perturbation is a turbine temporary fault which is realized through a speed drop. The following sequence summarizes this fault.

1. At t = 0, the system is in pre-fault state.
2. At t = 5s a temporary speed fault generates a mechanical power increase of 20%.
3. At t = 6s the speed fault is removed and the system operates in post-fault state.

The obtained experimental results are illustrated on the following figures:

In all experimental results, the proposed control can be used to ensure

connection to grid even under significant perturbations. In this case, the proposed control ensures the energy production continuity.

The results of Fig. 9 show that the proposed control regulates effectively and precisely terminal voltage and rotor speed of synchronous generator despite the tide speed variations. As a consequence, the marine turbine simulator can be directly coupled in electrical grid. The comparative study (Figs. 10–12) reveals that the proposed control regulates effectively the terminal voltage before and after fault, this is not case for AVR-PSS. In addition, it shows that after fault, the proposed control law reduces oscillation number compared with AVR-PSS.

Moreover, we have noticed that contrary in simulation the peak overshoot values with proposed control in practice are higher compared to those of AVR-PSS. This problem is due to the sign function approximation using to avoid the undesirable chattering effect in practice. It is necessary to note that these peak overshoot values remain in very small proportions (lower than 1%).

Globally, the proposed control is more efficient than AVR-PSS regarding terminal voltage regulation and oscillations damping, this fact is very important because it improves the grid connection quality and reduces the mechanical efforts on the drive shaft.

In the future, it will be interesting to analyze SOSMC stability applied on marine turbine system and to estimate the mechanical and electrical power losses when this system is connected to electrical grid.

5. Conclusion

In this paper, an experimental validation of nonlinear sliding mode control for WRSG excitation driven by marine turbine directly connected to grid has been studied. First of all, the control has been successfully tested in numerical simulations. Then we have decided to implement these satisfactory results on a bench including a WRSG coupled with a DC motor in order to look like marine turbine. The obtained results have proved that the proposed nonlinear sliding mode control can be well used in practice and that our marine turbine system can be directly coupled to electrical grid. Mechanical and electrical perturbations have been performed and the results have showed that the proposed control is robust enough to avoid the grid stall phenomena. Simulation and real-time experimental results have showed the efficiency of our control compared to conventional AVR-PSS in terms of terminal voltage regulation, precision and oscillations damping. The high simplicity design, the parameters number to tune (three parameters) and practical application possibilities constitute the main positive features of the proposed nonlinear control.

Acknowledgements

The experimental part of this work has been realized in the electrotechnical laboratory of “Département Energie, Ecole Supérieure d’Electricité, (SUPELEC) Gif-sur-Yvette, Paris, France”.

References

Andreica, M., Bacha, S., Roye, D., Guiraud, J., 2008. Intégration d’une hydrolienne au réseau, MPPT et qualité de l’énergie. Revue des Énergies Renouvelables 11 (4), 493–502.

Bahaj, A.S., Myers, L.E., 2003. Fundamentals applicable to the utilisation of marine current turbines for energy production. Renew. Energy 28, 2205–2211. ELSEVIER.

Beltran, B., Tarek, A.A., Benbouzid, M.E.H., 2008. Sliding mode power control of variable speed wind energy conversion. IEEE Trans. Energy Conv. 23 (2).

Ben Elghali, S.E., 2008. Modélisation et Commande d’une Hydrolienne Equipée d’une Génératrice Asynchrone Double Alimentation. JCGE'08 LYON, 16 et 17 décembre.

Ben Elghali, S.E., Balme, R., Saux, K.L., Benbouzid, M.E.H., Charpentier, J.F., Hauville, F., 2007. A Simulation model for the evaluation of the electrical power potential harnessed by a marine current turbine. IEEE J. Ocean. Eng. 32 (4).

Ben Elghali, S.E., Benbouzid, M.E.H., Charpentier, J.F., 2010. Comparison of PMSG and DFIG for marine current turbine applications. In: XIX International Conference on Electrical Machines - ICEM. Rome.

Ben Elghali, S.E., Benbouzid, M.E.H., Charpentier, J.F., Tarek, A.A., Munteanu, I., January 2011. Experimental validation of a marine current turbine simulator: application to a permanent magnet synchronous generator-based system second-order sliding mode control. IEEE Trans. Ind. Electron. 58 (1).

Ben Elghali, S.E., Benbouzid, M.E.H., Charpentier, J.F., July 2012. Generator systems for marine current turbine applications: a comparative study. IEEE J.Ocean. Eng. 37 (3).

Damm, G., Marino, R., Lamnabhi-Lagarrigue, F., 2004. Adaptive nonlinear output feedback for transient stabilization and voltage regulation of power generators with unknown parameters. Int. J. Robust Nonlinear Control 14, 833–855.

Dansoko, M., Nkwawo, H., Diourté, B., Floret, F., Goma, R., Kenne, G., 2013. Decentralized sliding mode control for marine turbine connected to grid. In: 11th IFAC International Workshop on Adaptation and Learning in Control and Signal Processing. University of Caen Basse-Normandie, Caen, France, pp. 293–298. July 3-5.

Dansoko, M., Nkwawo, H., Diourté, B., Floret, F., Goma, R., Kenne, G., 2014. Robust multivariable sliding mode control design for generator excitation of marine turbine in multimachine configuration. Int. J. Electr. Power Energy Syst. 63, 423–428. ELSEVIER).

Guangxing, L., Caiqin, S., Weifeng, L., Chuang, W., Bin, X., 2017. Application on modeling and simulation of turbine generator in DMS2016 marine engineering simulator. In: 9th International Conference on Measuring Technology and Mechatronics Automation (ICMTMA).

Kenné, G., Goma, R., Nkwawo, H., Lamnabhi-Lagarrigue, F., Arzandé, A., Vannier, J.C., 2010. Real-time transient stabilization and voltage regulation of power generators with unknown mechanical power input. Energy Convers. Manag. (51), 218–224. ELSEVIER.

Kenné, G., Goma, R., Nkwawo, H., Lamnabhi-Lagarrigue, F., Arzandé, A., Vannier, J.C., 2010. An improved direct feedback linearization technique for transient stability enhancement and voltage regulation of power generator. Electri. Power Energy Syst. 32 (2010), 809–816. ELSEVIER.

Marino, R., Damm, G., Lamnabhi-Lagarrigue, F., 2001. Adaptative nonlinear excitation control of synchronous generators with unknown mechanical power. In: Lecture Notes in Control and Information Sciences Volume 259. SPRINGER, pp. 107–121.

Myers, L., Bahaj, A.S., 2005. Simulated electrical power potential harnessed by marine current turbine arrays in the Alderney Race. Renew. Energy 30, 1713–1731. ELSEVIER.

Toumi, S., Ben Elghali, S.E., Trabelsi, M., Elbouchikhi, E., Benbouzid, M.E.H., Mimouni, M.F., 2014. Robustness analysis and evaluation of a PMSG-based MarineCurrent turbine system under faulty conditions. In: 15th International Conference on Sciences and Techniques of Automatic Control& Computer Engineering - STA'2014. Hammamet, Tunisia, December 21-23.

Toumi, S., Benelghali, S., Trabelsi, M., Elbouchikhi, E., Amirat, Y., Benbouzid, M., M.F Moumini, April 2017. Modeling and simulation of PMSG-based marine current turbine system under faulty rectifiers conditions. J. Electric Power Comp. Syst. 45 (7), 715–725.

Yin, X.X., Lin, Y.G., Li, W., Gu, Y.J., July 2014. Integrated pitch control for wind turbine based on a novel pitch control system. J. Renew. Sustain. Energy 6 (4).

Yin, X.X., Lin, Y.G., Li, W., Gu, Y.J., Lei, P.F., Liu, H.W., 2015. Adaptive Back-stepping Pitch angle Control for Wind turbine based on a new electro-hydraulic pitch system. Int. J. Comput. Vis. 88 (11).

Yin, X.X., Lin, Y.G., Li, W., Oct. 2015. Operating modes and control strategy for Megawatt-Scale hydro-viscous transmission-based continuously variable speed wind turbines. IEEE Transactions on Sustainable Energy 6 (4).

Yin, X.X., Lin, Y.G., Li, W., Ye, H.G., September 2015. Loading system and control strategy for simulating wind turbine loads. J.Vibr. Control 23 (11), 1739–1752.

Yin, X.X., Lin, Y.G., Li, W., 2016. Predictive pitch control of an electro-hydraulic digital pitch system for wind turbines based on the extreme learning machine. Trans. Inst. Measur. Control 38 (11).