Detecting Voltage Swell, Interruption and Sag

Vladimir A. Skolota, Gennady S. Zinovev, *Member*, *IEEE*
NSTU, Novosibirsk, Russia

***Abstract* -Quality control of electrical energy and timely detection of interference and distortion of supply voltage is a very important task. This is necessary both to find the source of distortion, and to compensate for distortion. In this review, we consider the problem of detecting random events: voltage swell, interruption, and voltage sag in the power supply system. Timely detection of these events will help to compensate them, minimizing the damage. Various methods of detection are considered. Among them, calculation of the rms voltage, calculation of the peak value, calculation in dq-coordinates.**

***Index Terms* - quality of electrical energy, voltage sags, voltage interruptions, voltage swells,root mean square, peak value, dq0- coordinates.**

I. INTRODUCTION

THE PROBLEM OF DETECTING and measuring random events with supply system voltage is not new, before power electronics has long been the task of finding and compensating for distortions. And the task of detecting and measuring random events is an integral part of compensating distortions. The study of the problems of voltage sags and voltage interruptions is an important and actual task of the energy sector. These breakers of the quality of electrical energy have a significant negative impact on electrical systems [1] and industrial electrical equipment in them [2], primarily on transformers [3], causing them to additional current when voltage is restored, and to asynchronous electric motors [4], leading to torque peaks, speed disturbances.

The method described in GOST [5,6] is a measurement of the root-mean-square value over the half-period of the supply system voltage, and this is a sliding value, measured several times in half a period. As a rule, this is sufficient for an accurate determination of the beginning and the end of an event. However, this may not be sufficient to compensate for the voltage. For this, other methods are being developed. For example, algorithms that calculate peak grid voltage. Such algorithms usually allow detecting interference more quickly than the rms value drops to a threshold value. The compensators also use the transformation to dq-coordinates.

This review considers various methods of detecting an event on the supply system voltage and measuring the magnitude of this event. To begin with, it is necessary to define the events that we will be dealing with (section 2). In the following chapters, various algorithms are considered: the measurement of the rms value (section 3), the peak value (section 4) and the work in dq-coordinates (section 5). The Fourier method is also considered as a method of signal analysis and its application (paragraph 6). At the end, methods that are not separated into a separate chapter are discussed (section 7).

II. DEFINITIONS

To random events in GOST are interruptions, sags and voltage swells. A voltage interruption is a situation in which the voltage at the point of transmission of electrical energy is less than 5% of the reference voltage. The reference voltage is used as a basis for setting the residual voltage, voltage thresholds and other characteristics of the sag, voltage interruptions and voltage swell. In accordance with the requirements of GOST, the reference voltage is considered equal to the rated or agreed voltage of the power supply. In three-phase power supply systems, voltage situation is interrupted when the voltage is less than 5% of the reference voltage in all phases. If the voltage is less than 5% of the reference voltage not in all phases, the situation is treated as a voltagesag. The threshold value of the interrupt start is considered equal to 5% of the reference voltage. The interruption of voltage is a special case of a voltage sag [1].

When voltage interruption is detected, it is assumed that:

- in single-phase power supply systems, the voltage interruption begins when the voltage falls below the voltage interruption threshold and ends when the voltage value is equal to or below the voltage interrupt threshold value plus 2%;
- in three-phase power supply systems, the voltage interruption begins when the voltage value in all channels drops below the voltage interruption threshold and ends when the voltage value is equal to or higher than the voltage interrupt threshold value plus 2% in at least one channel from where the measurements are made. When determining the duration of the voltage interruption in three-phase supply system, the beginning of the voltage interruption can be fixed in one channel, and the termination in the other. The duration of the voltage interruption is equal to the time interval between the beginning and the end of the voltage interruption [2].

A voltage sag is a temporary decrease in the voltage at a particular point in the electrical system below a specified threshold. Voltage sags usually occur due to malfunctions in electrical grid or in electrical installations of consumers, as well as when connecting a powerful load. The failure of the voltage is usually associated with the occurrence and termination of a short circuit or other sudden increase in current in the system or electrical installation connected to

978-1-5386-5021-9/18/$31.00 ©2018 IEEE

the electrical grid. In accordance with the requirements of this standard, a voltagesag is regarded as an electromagnetic interference, the intensity of which is determined by both voltage and duration. The duration of the voltage sag can be up to 1 min. In three-phase power supply systems, the beginning of the voltage sag is taken to be the moment when the voltage in at least one of the phases falls below the threshold value of the beginning of the voltage sag, the moment when the voltage in all phases rises above the threshold value of the end of the voltage sag is taken as the end of the voltage sag.

When voltage sags are detected, it is assumed that:

- in single-phase power supply systems, the voltage sag begins when the $U_{rms(1/2)}$ value falls below the voltage sag threshold and ends when the $U_{rms(1/2)}$ value is equal to or greater than the voltage sag threshold plus 2%;
- In three-phase power supply systems, the voltage sag starts when a value in one or more channels falls below the voltage sag threshold and ends when the value equals or exceeds the voltage sag threshold plus 2% in all channels in which measurements are made.

The threshold value of the voltage sag is determined taking into account the measurement conditions.

The failure of the voltage is characterized by the residual voltage or the depth of the voltage sag and the duration of the sag. As the residual voltage, the smallest value measured in any channel during the voltage sag is received. The depth of the voltage sag is understood as the difference between the reference voltage and the residual voltage, expressed as a percentage of the reference voltage. For the duration of the voltage sag, the time interval between the beginning and the end of the voltage sag is taken. When determining the duration of the voltage sag in three-phase power supply systems, the beginning of the voltage sag can be fixed in one channel and the end in the other. The shape of the voltage sags is not necessarily rectangular. As a consequence, the measured duration of a particular voltage sag depends on the selected voltage sag threshold. The shape of the voltage sag can be estimated using several thresholds set within the range of the threshold values of the sag and the voltage interruption.

Voltage swell is the temporary increase in voltage at a particular point in the electrical system above a specified threshold. Voltage swell, as a rule, are caused by switching and switching off the load. Voltage swell can occur between phase conductors or between phase and protective conductors. Depending on the earthing device, short ground faults can also lead to voltage swell between the phase and neutral conductors. In accordance with the requirements of this standard, voltage swell is considered as an electromagnetic interference, the intensity of which is determined by both voltage and duration. The voltage swell threshold is set as a percentage of the value of the input voltage or the value of the sliding reference voltage. The manufacturer of the SI shall indicate the threshold voltage used.

If anvoltage swell is detected, it is considered that:

- in single-phase power supply systems, voltage swell begins when the voltage value rises above the voltage swell threshold and ends when the voltage value is equal to or below the voltage swell threshold value minus 2%;
- in three-phase power supply systems, voltage swell occurs when the voltage value in one or more channels rises above the voltage swell threshold and ends when the voltage value is equal to or below the voltage swellthreshold minus 2% in all channels in which measurements are made.

III. ROOT MEAN SQUARE METHOD

The measurement of voltage sags and voltage swell should be carried out on the basis of measurements in each channel of rms voltage values, updated for each half-period, $U_{rms(1/2)}$. The duration of the period should be determined by the value of the frequency of the measured signal.

The threshold value of the voltage sag is set as a percentage of the value of the input voltage or the value of the sliding reference voltage. The manufacturer of the SI shall indicate the threshold voltage used. The sliding reference voltage is usually not used in low-voltage power supply systems.

During a voltagesag, it may be useful to calculate one-period rms values, updated more often than each half-period (as defined in the normative part of this standard). For example, it may be useful to update a one-period rms value 128 times during a period. This approach allows more accurate identification of the beginning and end of the voltage sag using only the threshold values. The drawbacks of this approach include increasing the amount of data and processing, as well as using a smoothing filter that can distort the result.

Measurements of root-mean-square voltage values allow to correctly estimate the power in the resistive load. However, electronic devices are susceptible not only to the rms value of the voltage, but also to the peak value of the signal. To evaluate the effect of voltage sag on electronic devices, algorithms that are not based on the root-mean-square voltage value can be useful.

The method for detecting overvoltages and voltage dips, based on the calculation of the rms value, is given in the article [7]. The algorithm is reduced to computation in accordance with the equation:

$$V_{rms}[k] = \sqrt{\frac{1}{N}\sum_{i-0}^{N-1} v^2[k-i]} \quad (1)$$

The amount was considered as follows:

$$S[k] = v^2[k] - v^2[k-N] + S[k-1] \quad (2)$$

Where S[k] is:

$$S[k] = \sum_{n=0}^{N-1} v^2[k-n] \quad (3)$$

A more detailed description is given of the result of calculating the rms value of a three-phase greed for

various types of interference in the article [8]. An algorithm for detecting the type of interference by the nature of voltage sags was described. So not in all cases the problem was correctly identified by this method.

IV. PEAK VALUE METHOD

In the paper [9], an algorithm for calculating and estimating voltage sags is proposed. It is argued that, unlike the methods for calculating the rms value, the Fourier or peak voltage method using the window processing technique, this method more quickly detects voltage sags. The algorithm evaluates the amplitude, phase and frequency.

Since the rms is an effective sliding, calculated using a window with a half-period duration of the system voltage, it is possible to delay up to half the period between the actual voltage sag and the moment when the rms value drops below the threshold value.

A flowchart of the algorithm is shown in Fig. 1.

The algorithm works as follows. From the mains voltage v, the first harmonic voltage s calculated by the algorithm is subtracted:

$$e = v - s \tag{4}$$

The resulting error e is multiplied by the sine of the current phase of the mains voltage and the coefficient k_1. The integrated result of the calculation gives the voltage V corresponding to the peak voltage:

$$V = \int k_1 e sin\varphi dt \tag{5}$$

However, this voltage is updated in real time, and not from peak to peak. In parallel, the voltage frequency and phase are calculated. The frequency is obtained as the product of the product of the peak voltage V, the error e, the cosine of the current phase, and the coefficient k_2.

$$\omega = \int k_2 e V cos\varphi dt \tag{6}$$

The phase is calculated as this product passed through the proportional-integral link.

$$\varphi = \int (k_3 e V cos\varphi + \omega) dt \tag{7}$$

From the received phase, calculate the sine and cosine. The sine, multiplied by the peak voltage V, gives the first harmonic of the voltage.

$$s = V sin\varphi \tag{8}$$

An experiment was performed confirming the operation of the algorithm. The graphs of the algorithm are shown in Fig. 2. Figure A shows the input voltage of the system with anvoltage swell instantaneously appeared and also instantaneously asleep. Graph B shows the calculated voltage value. graph C - error e, graph D - calculated peak voltage V.

The upper graph represents the incoming voltage v, which has a drop in the section under consideration. The second graph is the feedback with the calculated first harmonic of the voltage s. The third graph is the computed error of the algorithm e. This error has bursts only when the input voltage drops. These bursts and regulate the value of the calculated peak amplitude V. In the future, the error converges to zero in the oscillatory process. The bottom graph represents the value of the calculated peak amplitude V.

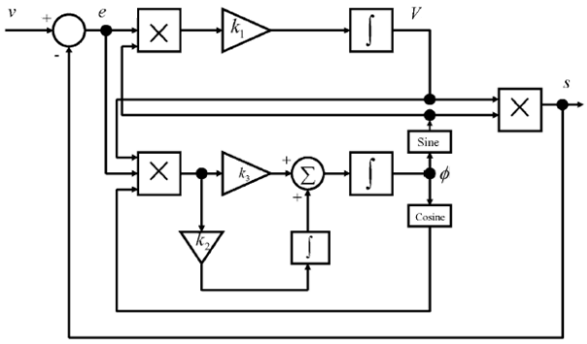

Fig.1 Block diagram of the algorithm for calculating the peak value

Fig.2 The diagrams of the algorithm for calculating the peak value

A comparison of the rms value (reduced to the peak value) and the peak value calculated by the algorithm is shown in Fig. 3.

For an example of the operation of the algorithm, an input voltage with instantaneous level difference was considered. The calculation showed that the algorithm is ahead of the rms value. This lead is small, but it can be critical to compensate for voltage drop.

A similar method is described in [10]. In this article, this algorithm is used in the three-phase system model.

Another way to calculate the peak value is given in [11]. It is based on tracking changes in the value of vd. But it has a feature in sudden voltage surges: the method briefly shows the increase in the value of the peak voltage. And only after that it decreases to a real value. Such jumps make it difficult to use the method. There is a need to delay the change in the peak value, which slows down the work with this method as a whole.

Another way to calculate the peak value is given in [12]. It is based on taking the derivative of the input signal and processing it. So from a signal its amplitude is allocated according to the formula:

$$V_{sum} = V_m^2 \sin^2(\omega t) + V_m^2 \cos^2(\omega t) \tag{9}$$

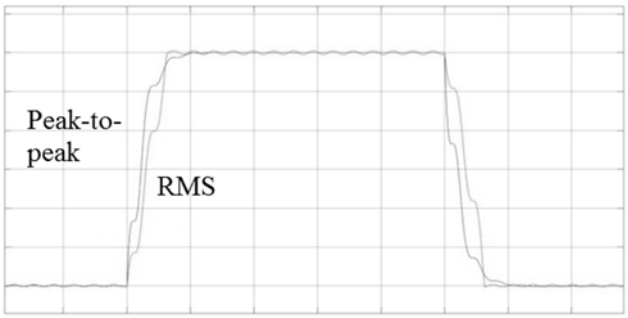

Fig.3 Comparison of the work of the algorithm for calculating the peak value and the rms value with increasing and decreasing voltage of the grid

V. WORK IN dq0-COORDINATES

For the analysis of compensators, a method for estimating the supply system voltage in dq0-coordinates is widely used. Unlike the previous method, the whole three-phase system is evaluated here. Variations of this method with a different method of specifying an ideal voltage are described. In [13], a method for specifying a reference three-phase voltage is described. Another paper [14] describes a method for specifying directly in dq0-coordinates.

The method itself consists in transferring the voltage of the three-phase system into dq0-coordinates. The phase-locked loop determines the phase of the three-phase power supply systems. With this phase, the voltage of the supply system and the reference voltage are transferred, if available. In new coordinates, real and ideal signals are compared. The difference is converted to normal coordinates and can be used to compensate for distortion. In this case, the instantaneous value is calculated, which makes the reaction to the change also instantaneous, as shown in Fig. 4. Here the graph A shows the input voltage, the graph B represents the ideal signals. Graph C is the calculated difference, which must be compensated.

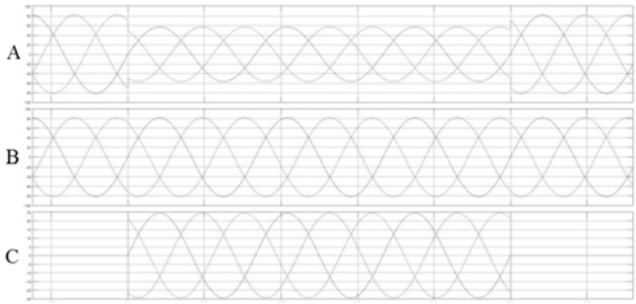

Fig.4 Diagrams of operation of the algorithm with dq-transformation

There are variants of this circuit for single-phase voltage [15]. In this case, the αβ-coordinates converted to the dq0-coordinate are used.

An improved dq-algorithm, described in [16], was also developed. This method is based on the formula:

$$v_q = -\frac{dv_d}{wdt} \qquad (10)$$

Starting from it, only the transformation to vd coordinate was required for the calculation.

Another version of this method is described in [17]. The article describes a transformerless voltage compensator. This circuit is controlled by a control system built in dq-coordinates.

The voltage compensator with a control system is given in [18]. This control system is based on converting the supply voltage and load into dq-coordinates. In these coordinates, these voltages are compared with the reference signals. The errors obtained are compared with each other. Their difference is converted to normal coordinates to control the compensation scheme.

A similar compensator with close to the above control systems is described in [19..22].

VI. FOURIER ANALYSIS METHOD

An analytical method for determining the spectral components of high voltage multilevel voltage converters is presented in [28]. This method uses a double Fourier series to analyze the output signal of the converter. The harmonic spectrum of the signal of a multilevel converter can be represented as:

$$F(t) = \frac{A_{00}}{2} + \sum_{n=1}^{\infty}\{A_{0n}\cos n\omega_m t + B_{0n}\sin n\omega_m t\}$$
$$+\sum_{m=1}^{\infty}\{A_{m0}\cos m\omega_c t + B_{m0}\sin m\omega_c t\} \qquad (11)$$
$$+\sum_{m=1}^{\infty}\sum_{n=-\infty}^{\infty}\{A_{mn}\cos[m\omega_c + n\omega_m]t + B_{mn}\sin[m\omega_c + n\omega_m]t\}$$

Hence it can be seen that the signal spectrum can be decomposed into a direct current component, the first harmonic, the components of the fundamental harmonics, and the components of the carrier frequency harmonics. The coefficients are given by the double Fourier integral:

$$C_{mn} = A_{mn} + jB_{mn} = \frac{1}{2\pi^2}\int_{-\pi}^{\pi}\int_{-\pi}^{\pi} F(t)e^{j(mx+ny)}dxdy \qquad (12)$$

The results of computing this integral are given in the article.

Thus, the Fourier transform can return information about the state of the system. The advantage of this method is that it can return the magnitude and phase of each frequency component in the mains voltage, which is especially important if harmonics are present. In this case, information about frequencies other than the main one can be ignored or used. Or these frequencies can be filtered by other methods. It can be realized with a window fast Fourier transform. But the kernel of this transformation is in itself a function of averaging. Thus, it may take up to one period after the start of the event, before the information on the magnitude and phase can be considered accurate [29].

The values obtained can be used to generate a reference signal [30].

The Walsh transformation is used in [31]. With its help, the equations from the Fourier region are transformed into linear equations.

VII. OTHER METHODS

There are other methods for detecting and evaluating random events.

One of them, described in [23], is based on a comparison of the instantaneous values with the percentage of the reference value and the percentage of the amplitude. This method works only in a certain zone of the voltage sinusoid. This means that when an event occurs outside this zone, there is a delay before the event method is determined.

An outdated method for determining greed voltage interruptions is described in the article [24]. It is assumed that the measurement of the mean-square value is carried out for several periods. Then, when the voltage is interrupted, the root-mean-square value changes extremely slowly. This method is based on detecting a half-wave of the supply voltage. In the absence of a half-wave, the algorithm works. The delay in this case can reach half the period of the mains voltage.

There are also combined algorithms. For example, in [25], a combination of the calculation of the rms value and the measurement of the instantaneous value is considered. This algorithm is applied to the voltage compensator. Also, the article describes an experiment with a prototype device, showing the operability of such an algorithm.

Some of the methods described above with mathematical calculations describing their work contain an article [26].

In a separate group, systems operating in the frequency domain are distinguished [27]. They work as a rule based on the Fourier transform. Such systems can be used in voltage compensators. However, such systems react more slowly to rapid changes in stresses, so they are not widely used.

VIII. CONCLUSIONS

In GOST, the rms value is specified as the determining root mean square. This means that any algorithm can be implemented inside the device. For example, to compensate for sags, it is reasonable to use the fastest algorithm for determining interference. However, to determine the quality of electrical energy in accordance with GOST, it is necessary to use the rms value. This is simplified by the fact that modern calculation tools allow you to calculate the rms value several times in half the voltage period of the mains.

In case of hardware implementation of this or that algorithm, for example, on a microcontroller, it is necessary to take into account the time of calculation of the algorithm in a particular hardware implementation. This is due to the fact that a situation is possible in which the detection of a random event by calculating the rms value will be faster due to the speed of the algorithm itself on the microcontroller.

Estimating voltage in dq0-coordinates is the most commonly used method described in a large number of articles. It is particularly widely used in compensators. The hardware implementation of such an algorithm can be complicated by the large number of computations required for this method. However, for three-phase systems where the root-mean-square value or peak voltage must be calculated for each phase separately, the different in the calculation volume may not be large.

Determination of the peak value is reasonable to use in cases where exactly this characteristic of the grid voltage plays the most important role for consumers.

REFERENCES

[1] Cheng-ChiehShen, and Chan-Nan Lu. A Voltage Sag Index Considering Compatibility Between Equipment and Supply IEEE TRANSACTIONS ON POWER DELIVERY, VOL. 22, NO. 2, APRIL 2007

[2] Mark F. McGranaghan, , David R. Mueller, , and Marek J. SamotyjVoltage Sags in Industrial Systems IEEE TRANSACTIONS ON INDUSTRY APPLICATIONS, VOL. 29, NO.2, MARCWAPRIL 1993 .

[3] Luis Guasch, Felipe Córcoles, JoaquínPedra, and Luis Sáinz Effects of Symmetrical Voltage Sags on Three-Phase Three-Legged Transformers IEEE TRANSACTIONS ON POWER DELIVERY, VOL. 19, NO. 2, APRIL 2004 .

[4] Luis Guasch, Felipe Córcoles, and JoaquínPedra,Effects of Symmetrical and Unsymmetrical Voltage Sags on Induction Machines IEEE TRANSACTIONS ON POWER DELIVERY, VOL. 19, NO. 2, APRIL 2004.

[5] GOST 30804.4.30-2013 Electrical energy Compatibility of technical means electromagnetic methods for measuring electrical energy quality

[6] GOST 32144-2013 Electrical energy. Compatibility of technical means is electromagnetic. Norms of quality of electric energy in general-purpose power supply systems

[7] Suresh Kamble, Dr. ChandrashekharThorat, "Characteristics Analysis of Voltage Sag in Distribution System using RMS Voltage Method," ACEEE Int. J. on Electrical and Power Engineering

[8] Ding Ning, Cai Wei Suo Juan Wang Jianwei, XuYonghai, "Voltage Sag Disturbance Detection Based on RMS Voltage Method," Power and Energy Engineering Conference, 2009. APPEEC 2009

[9] Raj Naidoo, PragasenPillay, "A New Method of Voltage Sag and Swell Detection," IEEE TRANSACTIONS ON POWER DELIVERY, VOL. 22, NO. 2, APRIL 2007

[10] Suresh Kamble, Dr. ChandrashekharThorat, "A New Algorithm for Voltage Sag Detection," International Conference On Advances In Engineering, Science And Management (lCAESM -2012)

[11] Sanghoey Lee, Trung-Kien Vu and Hanju Cha, "A New Fast Peak Detector for Single or Three-Phase Unsymmetrical Voltage Sags," Energy Conversion Congress and Exposition (ECCE), 2010 IEEE.

[12] YutthachaiSillapawicharn, "A Fast Voltage Sag Detector Based on Peak Detection," Electrical Engineering/Electronics, Computer, Telecommunications and Information Technology (ECTI-CON), 2015

[13] Deepa Francis, Tomson Thomas, "Mitigation of Voltage Sag and Swell Using DynamicVoltage Restorer," International Conference on Magnetics, Machines & Drives (AICERA-2014 ICMMD)

[14] D. Rajasekaran1, Dr. SubhransuSekhar Dash2 and P. Vignesh3, "MitigationOf Voltage Sags And Voltage Swells By Dynamic Voltage Restorer,"Froc. of Int. Conf on Advances in Recent Technologies in Communication and Computing 2011

[15] YutthachaiSillapawicharn, "A Fast Single-Phase Voltage Sag Detection for Voltage Sag Compensation System," TENCON 2014

[16] Zaiming Fan, Xiongwei Liu, "A Novel Universal Grid Voltage Sag Detection Algorithm," Power Engineering and Automation Conference (PEAM), 2012

[17] v. Ansal, K. Ravikumar, P.Parthiban, "Transformerless Dynamic Voltage Restorer for Voltage Sag Mitigation," 2016 Biennial International Conference on Power and Energy Systems:Towards Sustainable Energy (PESTSE)

[18] DinhThanh Viet, Nguyen HuuHieu, Nguyen Le Hoa, Ngo Minh Khoa, "A Control Strategy for Dynamic Voltage Restorer," IEEE PEDS 2015

[19] Agileswari K. Ramasamy, Rengan Krishnan Iyer, Dr. Vigna K Ramachandaramuthy, Dr. R.N. Mukerjee, "Dynamic Voltage Restorer For Voltage Sag Compensation," IEEE PEDS 2005

[20] John Godsk Nielsen, Michael Newman, Hans Nielsen, FredeBlaabjerg, "Control and Testing of a Dynamic Voltage Restorer (DVR) at Medium Voltage Level," IEEE TRANSACTIONS ON POWER ELECTRONICS, VOL. 19, NO. 3, MAY 2004

[21] Hai N. Tran, PhanQuocDzung, Nhuan A. Le, Tuyen D. Nguyen, "Dynamic Voltage Restorer-Multilevel Inverter Based on Predictive Voltage Controller," International Conference on Sustainable Energy Technologies (ICSET) 2016

[22] Chris Fitzer, Mike Barnes, Peter Green, "Voltage Sag Detection Technique for a Dynamic Voltage Restorer," Industry Applications Conference, 2002

[23] Ding, Kai; Cheng, K.W.E.; Xue, X.D.; Divakar, B.P.; Xu, C.D.; Che, Y.B.; Wang, D.H.; Dong, P., "A Novel Detection Method for Voltage Sags," Power Electronics Systems and Applications, 2006. ICPESA '06. 2nd International Conference on, vol., no., pp.250, 255, 12-14 Nov. 2006

[24] lkko Harada, Fumio Ueno, Takahiro lnoue, lchirou Oota, "Digital Type Power-Failure Detector With Wide AC Frequency Response," INTELEC'91

[25] B. Bae, Student, J. Lee, Student, J. Jeong, B. Han, "Line-Interactive Single-Phase Dynamic Voltage Restorer With Novel Sag Detection Algorithm," IEEE TRANSACTIONS ON POWER DELIVERY

[26] Muhamad Mansor, Prof. Dr. Nasrudin Abdul Rahim, "Voltage Sag Detection – A Survey," Technical Postgraduates (TECHPOS), 2009

[27] Yash Pal, A. Swarup, Bhim Singh, "A Review of Compensating Type Custom Power Devices for Power Quality Improvement," Power System Technology and IEEE Power India Conference, 2008. POWERCON 2008

[28] Xu Jiang, Xiangning Xiao, Hao Liu and Yulong Ma, "The Output Spectrum Analysis of High-Power Multilevel Voltage Source Converters using Double Fourier Series," IEEEIPES Conf and Exhib

[29] C.Fitzer, M. Barnes and P.Green, "Voltage sag detection technique for a dynamic voltage restorer," IEEE Trans.IA,vol.40, pp.203-212, Feb2004

[30] F.A.L.Jowder, "Modeling and Simulation of Dynamic Voltage Restorer (DVR) Based on Hysteresis Voltage Control,"in Proc. IEEE Conf on Industrial Electronics Society, 2007, pp. 1726-1731

[31] Z.Yanlei, "Design and implementation of inverter in dynamic voltage restorer based on Selective Harmonic Elimination PWM,"in Proc. Int. Conf Electric Utility Deregulation and Restructuring and Power Technologies, 2008, pp.2239-2244

Vladimir A. Skolota was born in Novosibirsk region, in 1989. Received Master's degree from the Novosibirsk State Technical University in 2015. Since 2015, a postgraduate student of the Department of Electronics and Electrical Engineering.

Gennady S. Zinoviev is a professor of the Industrial Electronics Department of the Novosibirsk State Technical University (NSTU), research supervisor of the Research Laboratory "Optimization of Energy in Converting Systems". Author of the textbook on power electronics, two monographies devoted to electromagnetic compatibility of converters, more than 90 patents and over 200 publications.